1978

Corvette

Including Limited Edition

CHEVROLET

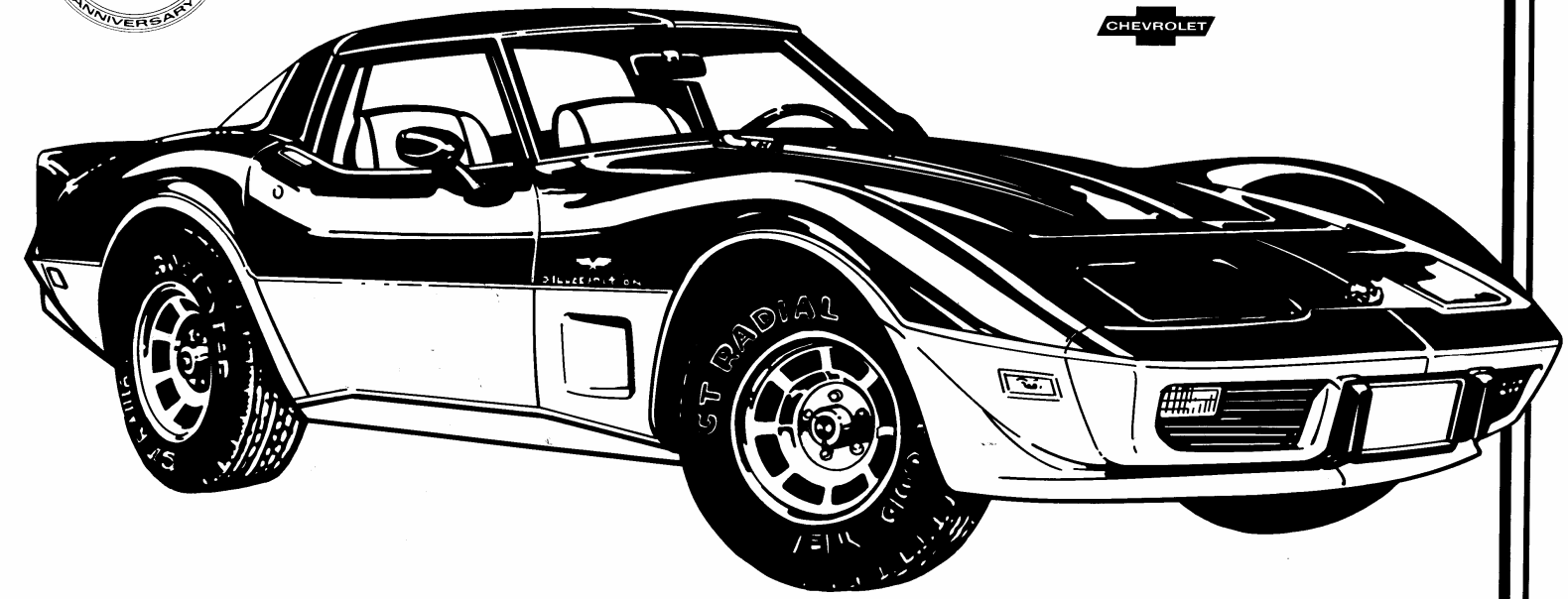

Electrical Troubleshooting Manual

ST-361-78

1978 CORVETTE ELECTRICAL TROUBLESHOOTING MANUAL

Corvette Electrical Troubleshooting Manual Survey

These survey questions are designed to give Chevrolet your thoughts and comments on the "real world" value of our Corvette Electrical Troubleshooting Manual. Read the Introductory pages carefully before you move on to the circuit analysis pages. Then, after you have become familiar with the content and layout of the manual, please take a few moments to clip out and fill out the questionnaire. Your answers will aid us greatly in the development of future Electrical Troubleshooting Manuals.

When you have completed the questionnaire, fold the sheet as indicated to form a stamped, self addressed letter, tape it closed and drop it into the mail.

Thanks for your help.

ELECTRICAL DIAGNOSIS SURVEY

1. How much of your time is spent on electrical work?

   _____ Most. I am an electrical specialist.
   _____ A lot. I do quite a bit of electrical repair.
   _____ A little. Not my primary job but I do some.
   _____ Not much. I am primarily engaged in other areas.

2. My initial impression is that this manual will:

   _____ Prove useful frequently.
   _____ Prove useful occasionally.
   _____ Might be useful.
   _____ Will not be useful.

3. Would you like to see this approach used on other Chevrolet models?

   _____ Yes
   _____ No

4. Considering the material covered, what is your opinion of the size of the manual.

   _____ Convenient.
   _____ Awkward.

5. Do you anticipate a change in your diagnosis time as a result your using this manual?

   _____ A significant reduction in diagnosis time.
   _____ Some reduction in diagnosis time.
   _____ Probably no reduction in diagnosis time.

6. Would you buy this manual?

   _____ Yes
   _____ No

7. Do you:

   _____ Prefer this approach to that normally published in the Service Manual?
   _____ Prefer the Service Manual approach?

8. If you have been using the 1977 Corvette Electrical Troubleshooting Manual during the past year, give us your opinion of its worth.

   _____ Extremely useful. Referred to manual constantly.
   _____ Useful. Kept manual handy.
   _____ Referred to manual occasionally.
   _____ Found manual to be of little use.

9. Do you think that this diagnosis manual could replace the foldout circuit diagrams normally provided in the Chevrolet Wiring Diagram Booklet.

   _____ Yes
   _____ No

10. What is your job classification?

    _____ Mechanic / Technician
    _____ Service Management
    _____ Write - up
    _____ Other (Please Specify)

    _____

11. Comments _____

ne)

FIRST CLASS
Permit No. 356
Detroit, Mi.

BUSINESS REPLY MAIL
NO POSTAGE NECESSARY IF MAILED IN U.S.

Chevrolet Motor Division
30007 Van Dyke
Warren, Mi. 48090

ten: J.E. Ditzel
chnical Support
3-136 C.O.W.A.

ne)

IMPORTANT SAFETY NOTICE

Proper service and repair is important to the safe, reliable operation of all motor vehicles. The service procedures recommended by Chevrolet and described in this service manual are effective methods for performing service operations. Some of these service operations require the use of tools specially designed for the purpose. The special tools should be used when and as recommended.

It is important to note that this manual contains various Warnings, and Cautions which should be carefully read in order to minimize the risk of personal injury to service personnel or the possibility that improper service methods will be followed which may damage the vehicle or render it unsafe. It also is important to understand that these Warnings and Cautions are not exhaustive. Chevrolet could not possibly know, evaluate, and advise the service trade of all conceivable ways in which service might be done or of the possible hazardous consequences of each way. Consequently, Chevrolet has not undertaken any such broad evaluation. Accordingly, anyone who uses a service procedure or tool which is not recommended by Chevrolet must first satisfy himself thoroughly that neither his safety nor vehicle safety will be jeopardized by the service method he selects.

Be sure to read the Introduction on pages 2 and 3 before using this Manual.

SYSTEMS INDEX

	Page
Air Conditioning/Heater Blower	16, 17
Anti Theft	30, 31
Charge	5
Cigar Lighter	22, 23
Clock	22, 23
Cruise Control	26
Delayed Pulse Wiper/Washer	32, 33
Gauges	20, 21
Headlight Warning	18, 19
Heater Blower	15
Horn	24, 25
Ignition	7
Ignition Key Warning	18, 19
Lights	
Backup	8, 9
Brake Warning	20, 21
Control	28, 29
Courtesy	22, 23
Gauge	28, 29
Hazard Warning	10, 11
Head	8, 9
Instrument	28, 29
License	10, 11
Park	10, 11
Seatbelt Warning	18, 19
Stop	10, 11
Turn Signal	10, 11
Power Antenna	14
Power Distribution	4, 5
Power Door Lock	30, 31
Power Windows	27
Radio	12, 13
Rear Window Defogger	24, 25
Seatbelt Warning	18, 19
Starter	6
Tachometer	20, 21
Windshield Wiper/Washer	34

SYSTEMATIC TROUBLESHOOTING

1. **Verify the Complaint**
   Check the problem yourself to be sure it was correctly and completely stated. If practical, ask the owner to demonstrate the problem. Don't troubleshoot half a problem!
2. **Understand Circuit Operation**
   Be sure you understand how the circuit was designed to operate before you attempt to understand how it failed.
3. **Test the Circuit and Locate the Fault**
4. **Repair the Fault**
5. **Recheck Circuits for Proper Operation**

WIRE SIZE AND INSULATION COLOR

Wire size and insulation color is included on the schematic to help identify each circuit. When two wire insulation colors are shown, the first is the overall color and the second is the stripe color. Black wires are always ground. Wire size is given in AWG (American Wire Gauge).

Blk = Black
Brn = Brown
Gry = Gray
Orn = Orange
Pnk = Pink
Lt Blu = Light Blue
Dk Blu = Dark Blue
Lt Grn = Light Green
Dk Grn = Dark Green
Ppl = Purple
Red = Red
Tan = Tan
Yel = Yellow
Wht = White

Example: 20 Dk Blu/Yel

20 gauge wire, dark blue overall color, with a yellow stripe.

FUSE AND CIRCUIT BREAKER DATA

Circuit	Ampere Rating	Circuit Breaker or Fuse
Headlamp Circuit		Circuit Breaker
Power Window Circuit	30 amp	Circuit Breaker
Backup Light & Turn Signals	20 amp	AGC Fuse
Heater/Air Conditioning	25 amp	3AG Fuse
Radio, Automatic Trans., Rear Defogger	20 amp	AGC Fuse
Instrument Lights	6 amp	AGC Fuse
Tail Lights (Side Marker & Parking Lights)	20 amp	SFE Fuse
Clock, Lighter, Courtesy, Anti-Theft Alarm, Glove Box, Dome	20 amp	SFE Fuse
Stop/Hazard Warning, Key Warning Buzzer, Horns	20 amp	SFE Fuse
Gauges/Telltale Lights, Seat Belt Buzzer Light, and Relays (Power Window Relay), Cruise Control	10 amp	AGC Fuse
Wipers/Washers	25 amp	AGC Fuse

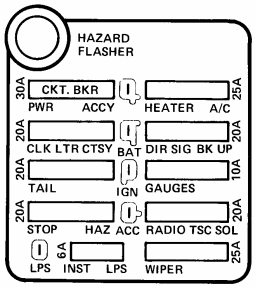

FUSE LOCATION

The headlight circuits are protected by a circuit breaker in the light switch. An electrical overload on the breaker will cause the lamps to go on and off, or in some cases to remain off.

In addition to a fuse, the windshield wiper motor is also protected by a circuit breaker. If the motor overheats, due to overloading caused by heavy snow, etc. the wipers will remain stopped until the motor cools. Be sure to correct the cause of overloading.

Also, a circuit breaker, mounted on the toe panel protects the power window circuit if vehicle is so equipped.

ELECTRICAL TROUBLESHOOTING

Most automotive electrical troubleshooting can be efficiently performed with three basic tools:

Test Light
Self Powered Test Light
Jumper Wire

LIGHT BULB DATA

Application	Candle Power	Trade Number
Headlight – Outer		4000
Inner – High		5001
Headlight Beam Indicator	2	194
Parking and Directional Signal	2.2 - 24	1157 N.A.
Tail and Stop-Directional Signal	3 - 32	1157
License Plate Light	3	168
Backup Light	32	1156
Instrument Center Cluster	3	192
Instrument Panel Cluster	2 3	194 192
Electric Clock	2	194
Courtesy Light (Overhead)	4	214-2
Radio Dial	1	161
Stereo Indicator	LED *	DS410
Electro-Clear Indicator	.15	2102D
Brake System Warning Light	2	194
Directional Signal Indicators	2	194
A/C or Heater Control Panel Light	3	558
Side Marker – Front	3	168
Side Marker – Rear	3	168
Courtesy Lights (Front)	6	906
Seat Belt Warning Light	2	194
Transmission Control Light	1	161
Low Fuel Light	2	194
Generator Light	2	194
Spare Tire, Underhood Light	3	168
Cigarette Lighter Light	7	1445
W/S Washer & Light Switch Light	2	194
Turn Signal Flasher	2 Lamp Type	
Hazard Warning Flasher	6 Lamp Type	
Underhood Light	15	93

* Light Emitting Diode

Test Light

The TEST LIGHT is a 12 volt light bulb with a pair of convenient length test leads attached. See figure A.

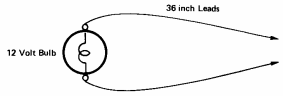

Figure A – Test Light

Voltage Check

The TEST LIGHT is used to check for the presence of voltage. See figure B.

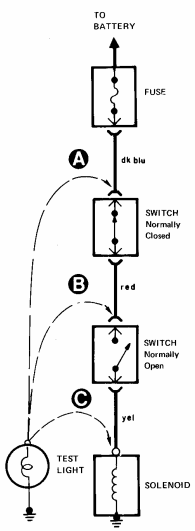

Figure B

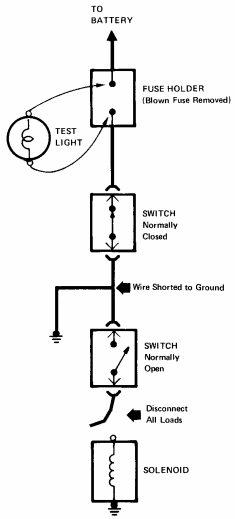

Figure C

In troubleshooting this circuit, use the TEST LIGHT to test for voltage at each component. If check "A" indicates voltage present you know the fault is in one of the two switches or the red or yellow wire. If check "B" indicates voltage present, the fault is isolated to either the normally open switch or the yellow wire.

Short to Ground Check

See figure C. This circuit is shorted to ground - the wire between the two switches is rubbing on the car frame when the car is driven. To troubleshoot, remove the fuse and connect your TEST LIGHT across the fuse terminals. Work your way down the circuit moving the harness back and forth. When the TEST LIGHT comes on, you have moved the harness such that the wire is shorted to the frame. When the TEST LIGHT goes out, you have moved the harness such that the wire is not shorted to the frame. Continue moving the harness until you locate the shorted point.

Self Powered Test Light

The SELF POWERED TEST LIGHT is a light bulb, battery and test leads all connected together. See figure D.

The SELF POWERED TEST LIGHT bulb will light when the test leads are connected together, either directly or through a circuit wire. Figure E shows use of the SELF POWERED TEST LIGHT in testing a BLOWER SWITCH for correct operation.

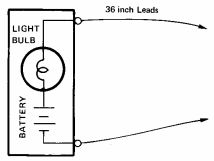

Figure D

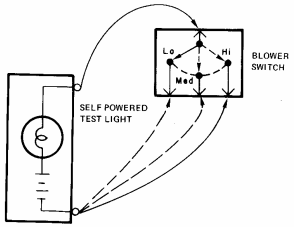

Figure E

Jumper Wire

The JUMPER WIRE, figure F, is a length of wire used for temporarily connecting two points of a circuit together during troubleshooting. For example, in figure B, a JUMPER WIRE could be used to "Short Out" or bypass the normally open switch.

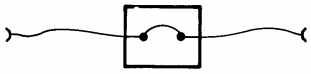

CIRCUIT BREAKER

Figure F

CIRCUIT NUMBERS

Numbers shown in rectangular boxes 231 are circuit numbers used in other Chevrolet technical data. They are included in the Electrical Troubleshooting Manual for easy reference between this Manual and other data.

SYMBOLS

SPLICE

CONNECTOR

20 DK BLU/YEL 20 GAUGE WIRE DARK BLUE OVERALL COLOR WITH A YELLOW STRIPE

BATTERY

CAPACITOR

CIGAR LIGHTER

CIRCUIT BREAKER

DOUBLE POLE SWITCH

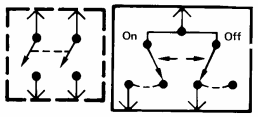

DUAL FILAMENT LIGHT BULB

ELECTRIC CHOKE HEATER

CIRCUIT NUMBER

FUEL GAUGE SENDER

FUSE

GROUND

HIGH PITCH HORN

LIGHT BULB (DASH OUTLINE INDICATES REMAINDER OF BULB IS SHOWN ELSEWHERE)

RADIO SPEAKER

REAR WINDOW HEATER

REFERENCE FINDERS A

RELAY

REVERSIBLE MOTOR

SPLICE

SWITCH AND LIGHT

TURN SIGNAL FLASHER

2 SPEED MOTOR

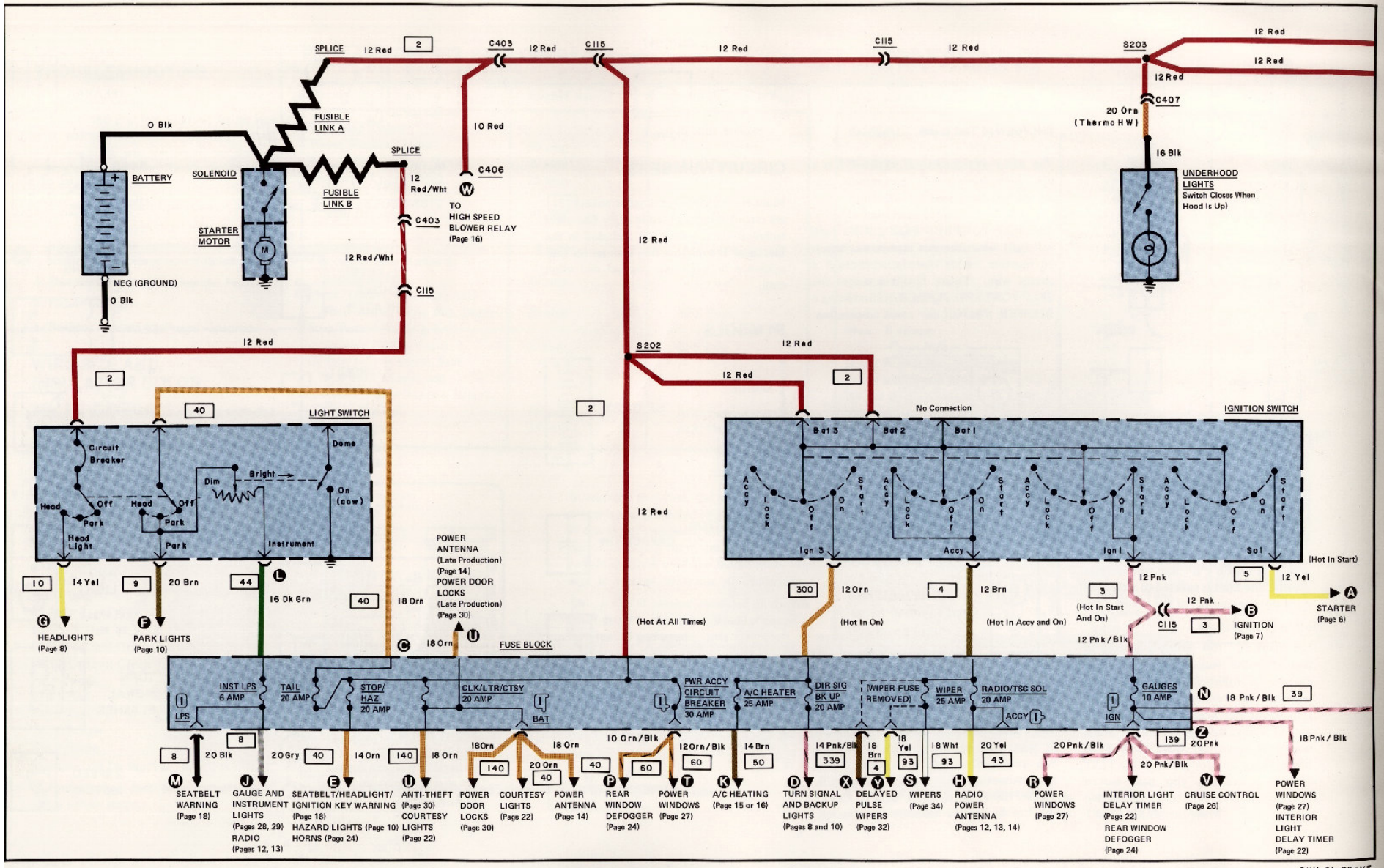
SPLICE
12 Red
2
C403
12 Red
C115
12 Red
C115
12 Red
S203
12 Red
12 Red
12 Red
C407
20 Orn
(Thermo HW)
16 Blk
UNDERHOOD LIGHTS
Switch Closes When Hood Is Up)
FUSIBLE LINK A
0 Blk
10 Red
SPLICE
BATTERY
SOLENOID
FUSIBLE LINK B
12 Red/Wht
C406
TO HIGH SPEED BLOWER RELAY (Page 16)
C403
STARTER MOTOR
12 Red/Wht
C115
NEG (GROUND)
0 Blk
12 Red
12 Red
S202
12 Red
12 Red
2
2
40
LIGHT SWITCH
Circuit Breaker
Dome
Bright
Dim
On (ccw)
Head
Off
Park
Head Light
Instrument
No Connection
IGNITION SWITCH
Bat 3
Bat 2
Bat 1
Accy
Lock
Off
On
Start
Ign 3
Accy
Ign 1
Sol
(Hot In Start)
10
14 Yel
9
20 Brn
44
16 Dk Grn
40
18 Orn
POWER ANTENNA (Late Production) (Page 14)
POWER DOOR LOCKS (Late Production) (Page 30)
18 Orn
FUSE BLOCK
(Hot At All Times)
300
12 Orn
(Hot In On)
4
12 Brn
(Hot In Accy and On)
3
(Hot In Start And On)
12 Pnk
12 Pnk
12 Pnk/Blk
C115
3
5
12 Yel
STARTER (Page 6)
IGNITION (Page 7)
HEADLIGHTS (Page 8)
PARK LIGHTS (Page 10)
INST LPS 6 AMP
TAIL 20 AMP
STOP/HAZ 20 AMP
CLK/LTR/CTSY 20 AMP
PWR ACCY CIRCUIT BREAKER 30 AMP
A/C HEATER 25 AMP
DIR SIG BK UP 20 AMP
(WIPER FUSE REMOVED)
WIPER 25 AMP
RADIO/TSC SOL 20 AMP
GAUGES 10 AMP
LPS
BAT
ACCY
IGN
18 Pnk/Blk
39
8
8
20 Blk
20 Gry
40
14 Orn
140
18 Orn
18 Orn
140
20 Orn
40
18 Orn
40
10 Orn/Blk
60
12 Orn/Blk
60
14 Brn
50
14 Pnk/Blk
339
18 Brn
4
18 Yel
93
18 Wht
93
20 Yel
43
20 Pnk/Blk
139
20 Pnk
20 Pnk/Blk
18 Pnk/Blk
SEATBELT WARNING (Page 18)
GAUGE AND INSTRUMENT LIGHTS (Pages 28, 29) RADIO (Pages 12, 13)
SEATBELT/HEADLIGHT/ IGNITION KEY WARNING (Page 18) HAZARD LIGHTS (Page 10) HORNS (Page 24)
ANTI-THEFT (Page 30) COURTESY LIGHTS (Page 22)
POWER DOOR LOCKS (Page 30)
COURTESY LIGHTS (Page 22)
POWER ANTENNA (Page 14)
REAR WINDOW DEFOGGER (Page 24)
POWER WINDOWS (Page 27)
A/C HEATING (Page 15 or 16)
TURN SIGNAL AND BACKUP LIGHTS (Pages 8 and 10)
DELAYED PULSE WIPERS (Page 32)
WIPERS (Page 34)
RADIO POWER ANTENNA (Pages 12, 13, 14)
POWER WINDOWS (Page 27)
INTERIOR LIGHT DELAY TIMER (Page 22) REAR WINDOW DEFOGGER (Page 24)
CRUISE CONTROL (Page 26)
POWER WINDOWS (Page 27) INTERIOR LIGHT DELAY TIMER (Page 22)
CHV-01-78-VF

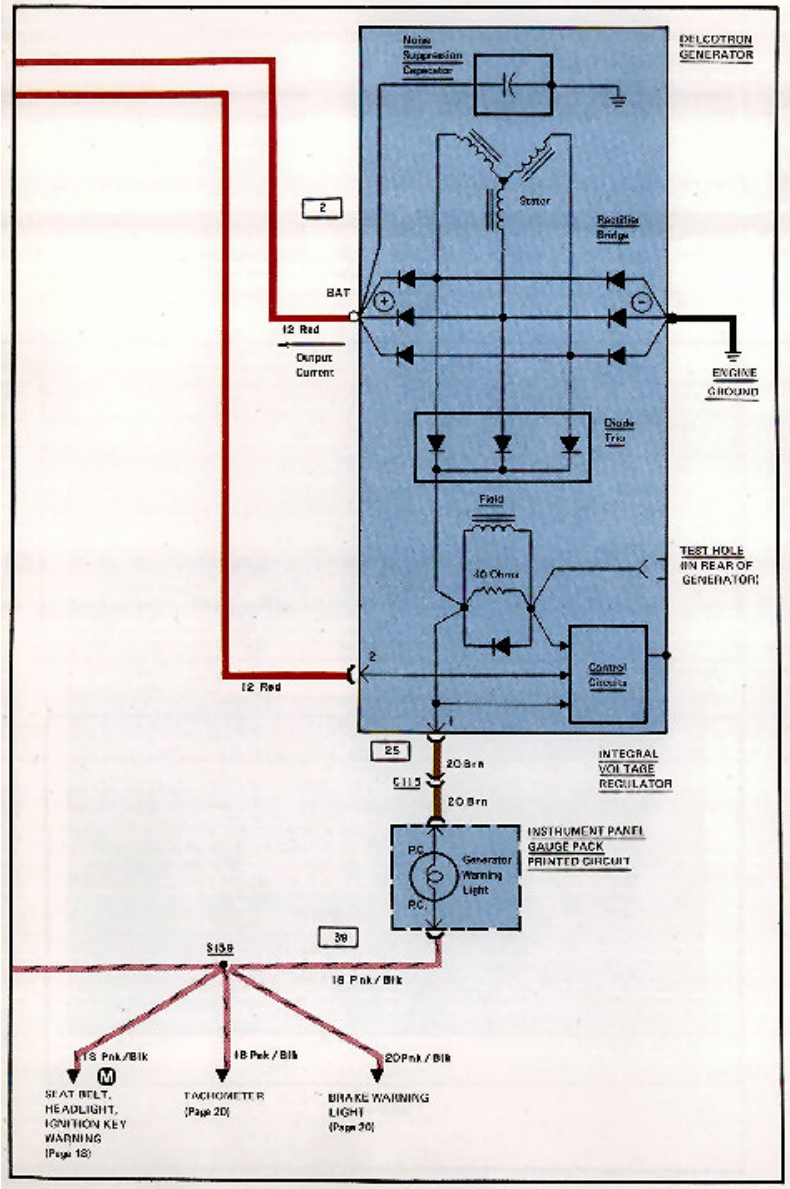

CIRCUIT OPERATION

The GENERATOR is used to operate all vehicle electrical equipment and to charge the battery. Alternating current is generated in the stator or fixed winding as the field rotates. This alternating current is changed to direct current by the rectifier bridge. The capacitor at the output terminal eliminates noise that would otherwise cause radio signal interference. The amount of voltage produced by the generator is controlled by the regulator. When the generator output voltage is low, the regulator increases the current flowing through the generator field which increases the generator's output voltage. Field current is supplied directly from the generator output by the diode trio or from the battery through the GENERATOR warning light.

At low engine speed, current flows from the battery, through the GAUGES fuse, through the GENERATOR warning light and finally through the generator field to ground. The GENERATOR light is on when the alternator field current is being supplied by the battery. As engine speed is increased, the generator output voltage increases and the generator field current is supplied by the generator (through the diode trio). With about the same voltage at each side of the GENERATOR light (circuits 39 and 25) the GENERATOR light goes out.

The voltmeter measures the voltage of the vehicle's electrical system. With the engine running, the voltmeter measures the voltage produced by the generator. When the engine is Off, and the IGNITION KEY On, the voltmeter measures battery voltage.

COMPONENT LOCATION

Battery		Behind driver's seat, below floor
C115		Engine bulkhead
C403	Figure D	Near anti theft hood switch
C406	Figure C	Top of plenum
C407		Near LH fender hood support
Fuse Block	Figure A	Engine bulkhead
Fusible Link A	Figure B	Starter solenoid
Fusible Link B	Figure B	Starter solenoid

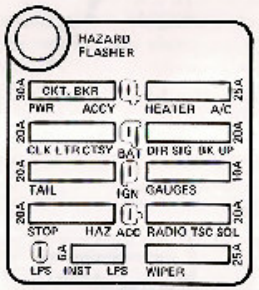

Figure A

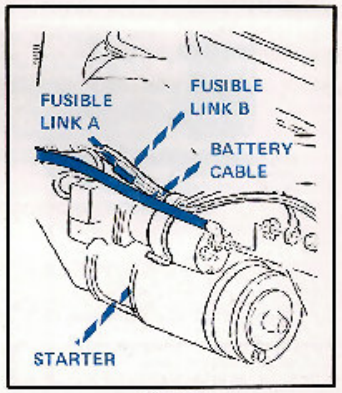

Figure B

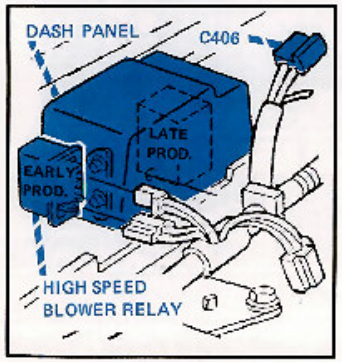

Figure C

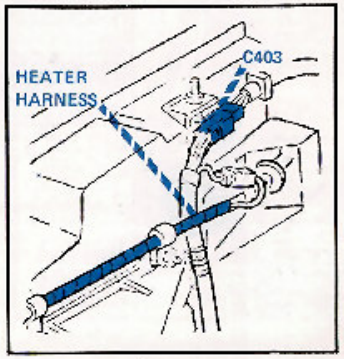

Figure D

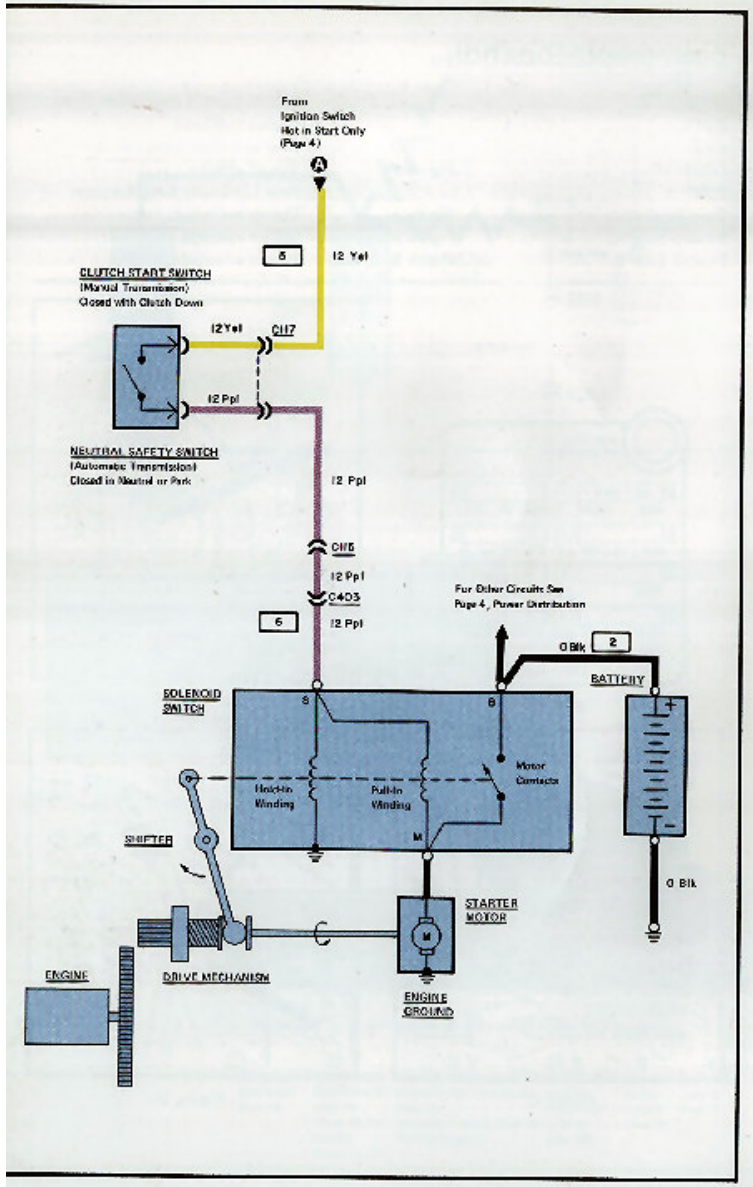

CIRCUIT OPERATION

Starter

When the IGNITION SWITCH is moved to the Start position, current flows through circuit 5, through the CLUTCH START or NEUTRAL SAFETY SWITCH and to terminal S on the SOLENOID SWITCH.

Current flows down through the Pull-In and Hold-In windings which work together magnetically to engage the DRIVE SHIFTER. Pull-In winding current also flows through the STARTER MOTOR, causing it to rotate slowly and insure proper meshing of gear teeth.

After the drive gears mesh, the Motor Contacts in the SOLENOID SWITCH close, bypassing the Pull-In winding and applying full battery voltage to the STARTER MOTOR. With full voltage, the STARTER MOTOR cranks the engine.

When the IGNITION SWITCH is released, current stops flowing in circuits 5 and 6. Current from circuit 2 keeps flowing to terminal M, up through the Pull-In winding and down through the Hold-In winding. The reverse current in the Pull-In winding cancels the magnetic effect of the Hold-In winding and the SOLENOID SWITCH releases the drive mechanism and motor contacts, which stops the current flow to the STARTER MOTOR.

COMPONENT LOCATION

Battery		Behind driver, under floor
C115		Engine bulkhead
C117	Figure B	Near clutch safety switch or neutral safety switch
C403	Page 5, Figure D	Near anti-theft hood switch
Clutch Start Switch	Figure A	On clutch bracket
Neutral Safety Switch	Figure B	Center console
Starter		Right rear engine

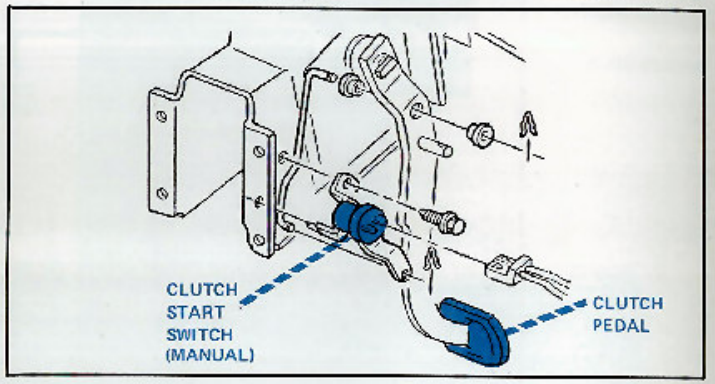

Figure A

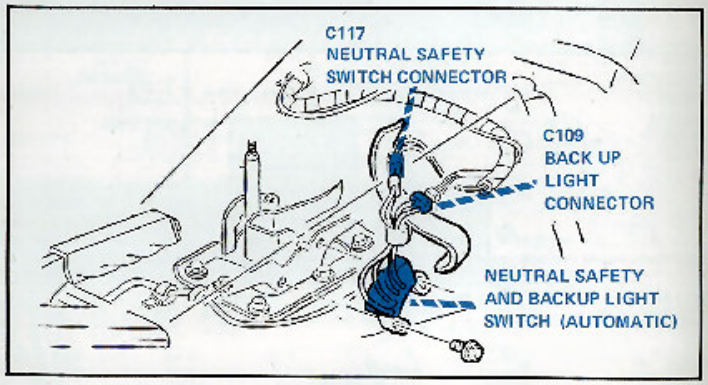

Figure B

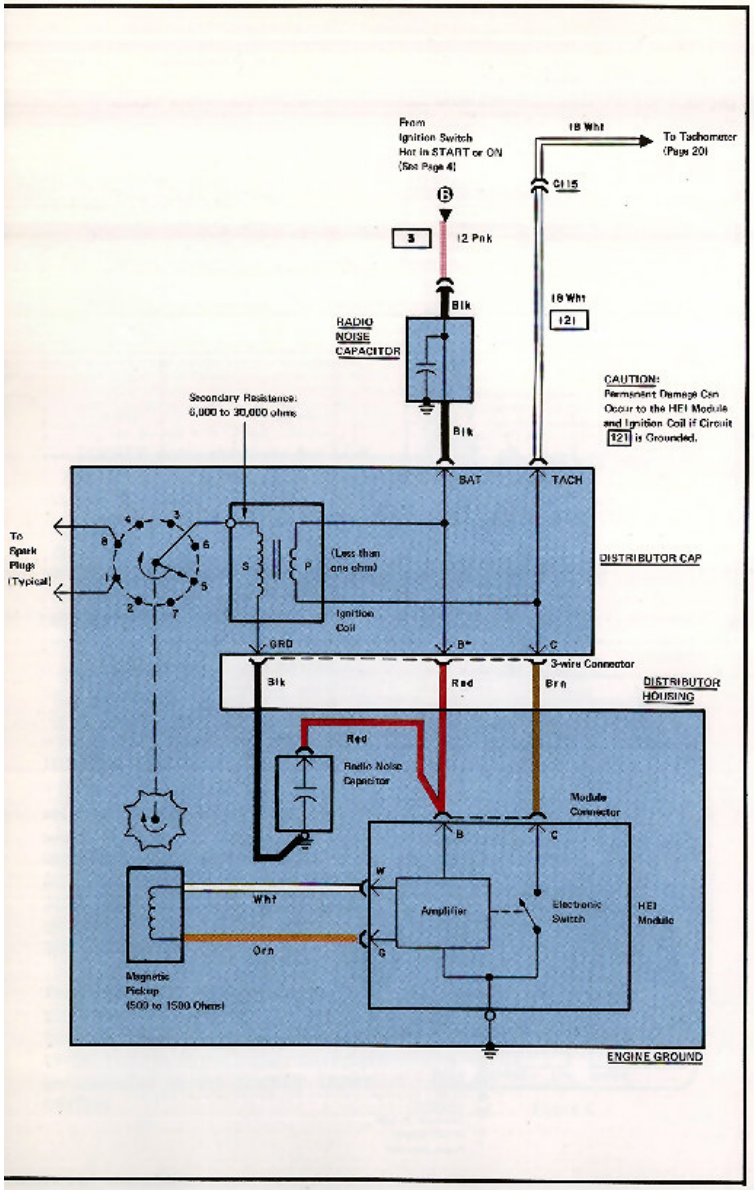

CIRCUIT OPERATION

Ignition

The IGNITION COIL, DISTRIBUTOR and HEI MODULE are combined in one unit. Power is supplied directly to the IGNITION CIRCUIT when the IGNITION SWITCH is in Start or On.

Magnetic Pickup - As the TIMER CORE rotates, a magnetic circuit closes each time a spark plug is to fire. See figure A. The magnetic circuit is like an electric circuit with the magnet acting as battery and the POLE PIECES and SHAFT acting as wires. The pointed teeth on the POLE PIECE and TIMER CORE act as a switch. When the teeth separate, the SWITCH opens. When the teeth come together, the switch closes and a magnetic pulse flows through the pickup coil. The magnetic pulse produces a voltage in the PICKUP COIL. The voltage is produced only when the pointed teeth of the CORE are passing the POLE PIECE, causing the magnetic circuit to rapidly close and open.

HEI Module - The HEI MODULE contains an AMPLIFIER and an ELECTRONIC SWITCH. The AMPLIFIER increases the power of the PICKUP COIL voltage to operate the ELECTRONIC SWITCH.

Ignition Coil - The IGNITION COIL stores magnetic energy in its iron core when its primary is connected between the battery voltage and ground. High voltage is produced in its secondary only when the primary circuit is opened. The primary is connected to ground through an electronic switch in the HEI MODULE.

System Operation - As the rotating CORE teeth and the POLE PIECE teeth come together, magnetic energy flows from the PERMANENT MAGNET. The magnetic energy passes through the PICKUP COIL and generates a small pulse of electric energy. The electric energy is increased by the HEI MODULE, which closes its ELECTRONIC SWITCH. The closed switch passes a large current through the IGNITION COIL PRIMARY. The PRIMARY current creates magnetic energy, which is stored in the iron frame of the COIL.

As the rotating core teeth leave the POLE PIECE teeth, their magnetic energy is suddenly reduced. The electric pulse from the PICKUP COIL is then reduced, and the ELECTRONIC SWITCH opens. As the switch opens, the PRIMARY magnetic energy in the IGNITION COIL frame quickly falls. The quick fall of magnetic energy produces a high voltage in the IGNITION COIL secondary. The high voltage passes to the DISTRIBUTOR ROTOR, and then to a SPARK PLUG to fire the mixture in the proper cylinder.

The ELECTRONIC SWITCH in the HEI MODULE closes only when the CORE teeth approach the POLE PIECE teeth. When the teeth are leaving each other, the ELECTRONIC SWITCH OPENS.

When the teeth are not moving, the ELECTRONIC SWITCH stays open.

COMPONENT LOCATION

C115	Page 11, Figure B	Engine bulkhead
Distributor Assembly	Figure B	Top of engine
Radio Noise Capacitor	Figure B	Near distributor

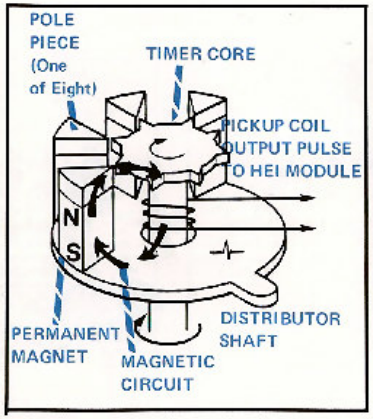

Figure A – Magnetic Pickup Operation

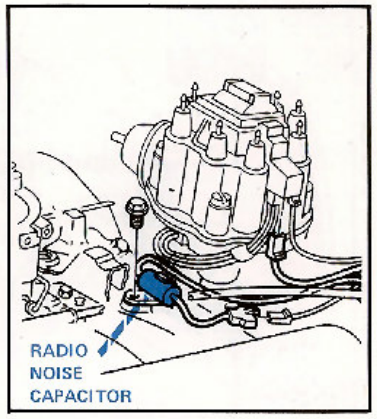

Figure B – Distributor

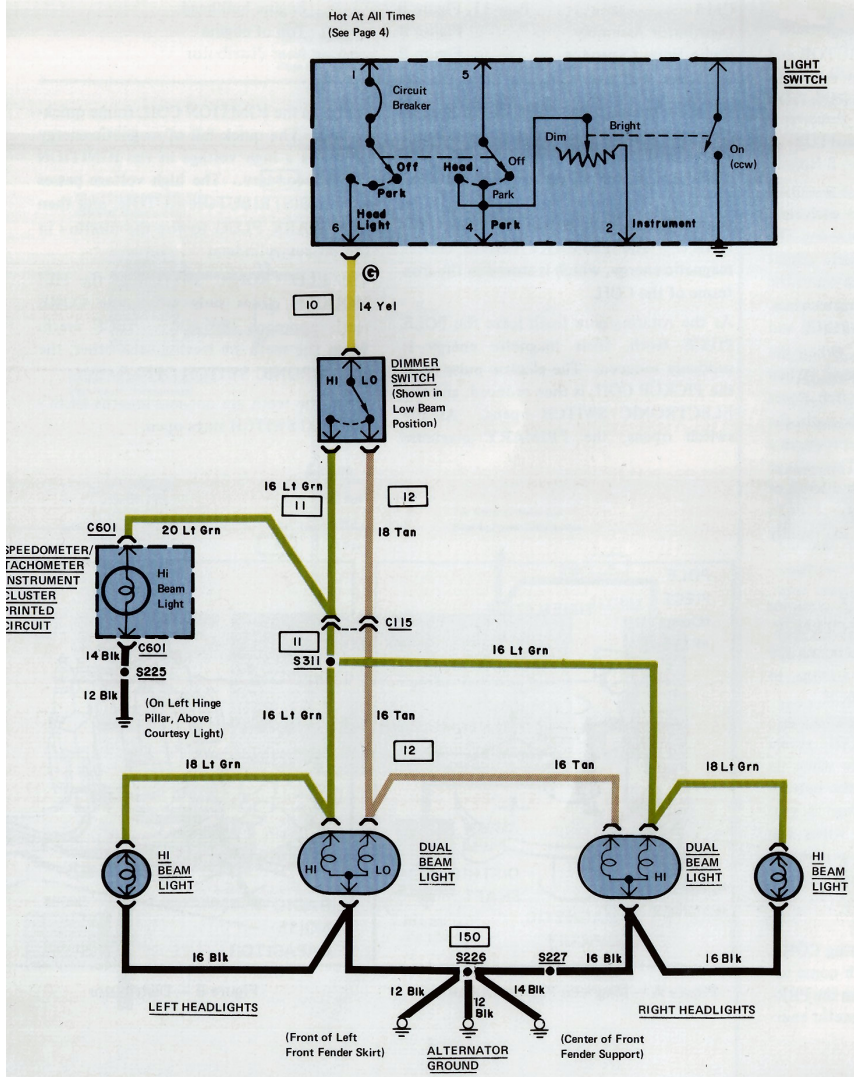
Hot At All Times
(See Page 4)
LIGHT SWITCH
Circuit Breaker
Off
Park
Head Light
Head
Off
Park
Dim
Bright
Park
Instrument
On (ccw)
10
14 Yel
DIMMER SWITCH (Shown in Low Beam Position)
HI
LO
16 Lt Grn
11
12
18 Tan
C601
20 Lt Grn
SPEEDOMETER/ TACHOMETER INSTRUMENT CLUSTER PRINTED CIRCUIT
Hi Beam Light
C601
14 Blk
S225
12 Blk
(On Left Hinge Pillar, Above Courtesy Light)
C115
11
S311
16 Lt Grn
16 Lt Grn
16 Tan
12
18 Lt Grn
16 Tan
18 Lt Grn
HI BEAM LIGHT
DUAL BEAM LIGHT
DUAL BEAM LIGHT
HI BEAM LIGHT
16 Blk
150
S226
S227
16 Blk
16 Blk
12 Blk
12 Blk
14 Blk
LEFT HEADLIGHTS
RIGHT HEADLIGHTS
(Front of Left Front Fender Skirt)
ALTERNATOR GROUND
(Center of Front Fender Support)

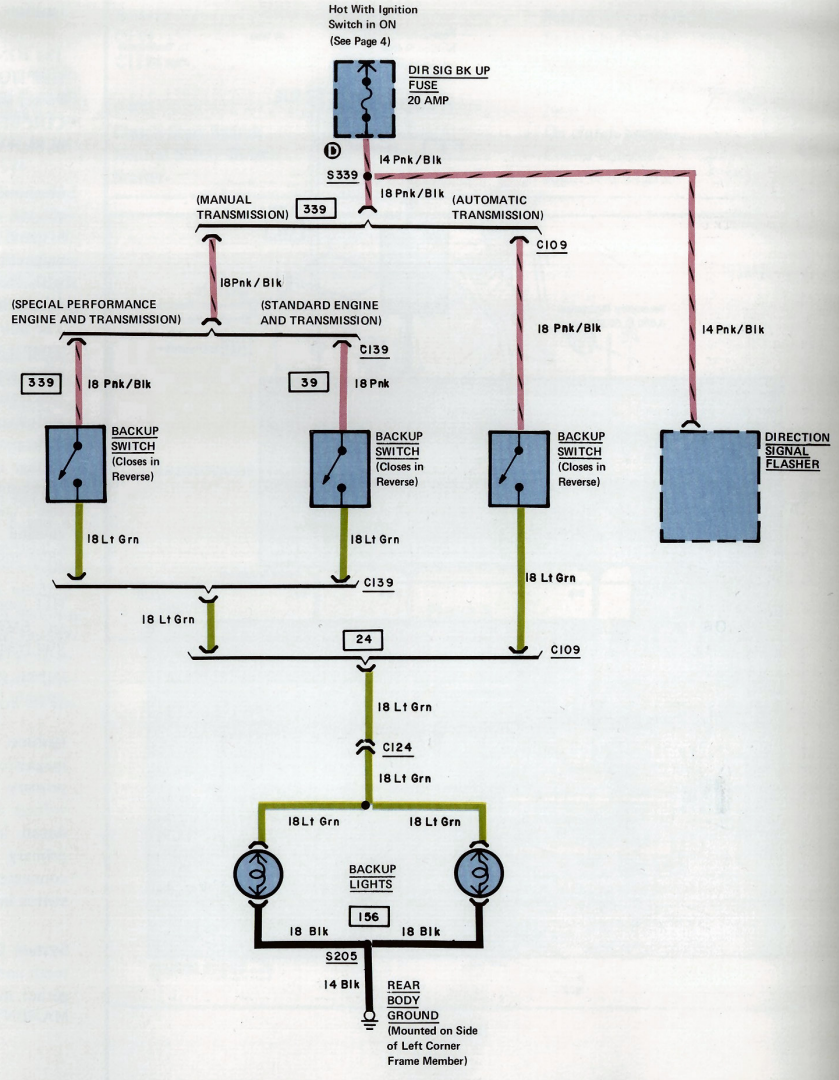
Hot With Ignition Switch in ON
(See Page 4)
DIR SIG BK UP FUSE 20 AMP
14 Pnk/Blk
S339
18 Pnk/Blk
(MANUAL TRANSMISSION)
339
(AUTOMATIC TRANSMISSION)
C109
18Pnk/Blk
(SPECIAL PERFORMANCE ENGINE AND TRANSMISSION)
(STANDARD ENGINE AND TRANSMISSION)
C139
18 Pnk/Blk
14 Pnk/Blk
339
18 Pnk/Blk
39
18 Pnk
BACKUP SWITCH (Closes in Reverse)
BACKUP SWITCH (Closes in Reverse)
BACKUP SWITCH (Closes in Reverse)
DIRECTION SIGNAL FLASHER
18 Lt Grn
18 Lt Grn
C139
18 Lt Grn
18 Lt Grn
24
C109
18 Lt Grn
C124
18 Lt Grn
18 Lt Grn
18 Lt Grn
BACKUP LIGHTS
156
18 Blk
18 Blk
S205
14 Blk
REAR BODY GROUND
(Mounted on Side of Left Corner Frame Member)

CIRCUIT OPERATION

Headlights

The HEADLIGHTS are controlled by the LIGHT SWITCH, which has power to it at all times. The HEADLIGHTS come on only when the switch is pulled out to the final position. The LIGHT SWITCH contains a self-resetting circuit breaker which protects only the HEADLIGHTS (the PARK and DOME light circuits are protected by their own fuses). The circuit breaker will trip open when it overheats from an overload or short in the circuits. It will then cool and re-close. If the overload remains, the power will "blink" on and off. The DIMMER switch selects the two LOW BEAM lights or the four HIGH BEAM lights and the INDICATOR LIGHT.

If neither HIGH BEAM nor LOW BEAM lights will come on, try a replacement LIGHT SWITCH and DIMMER SWITCH. These switches can be installed on the car's harness connectors before re-mounting, to insure that the fault has been corrected.

If only HIGH BEAM or LOW BEAM lights come on, suspect the DIMMER SWITCH. Notice that the HIGH BEAM INDICATOR is fed from the interior side of CONNECTOR C115.

If the HIGH BEAM INDICATOR light does not come on when the HEAD LIGHTS are bright, check the SPEEDOMETER/TACHOMETER INSTRUMENT CLUSTER ground by observing proper lighting of the TURN SIGNAL LIGHTS or the BRAKE LIGHT.

Backup Lights

The BACKUP LIGHTS operate from the IGNITION SWITCH in the On position. Protection is provided through the BACKUP/DIRECTION SIGNAL fuse. The lights are controlled by the BACKUP LIGHT SWITCH.

If the BACKUP LIGHTS will not operate, check if the DIRECTION SIGNALS operate correctly, since they are fed from the same fuse. If the DIRECTION SIGNAL operates correctly, check the BACKUP SWITCH and the associated wiring.

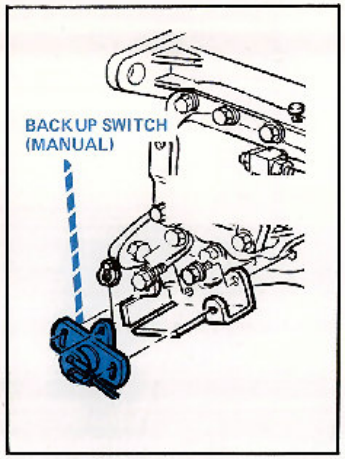

Figure A

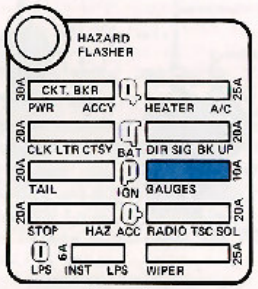

Figure C

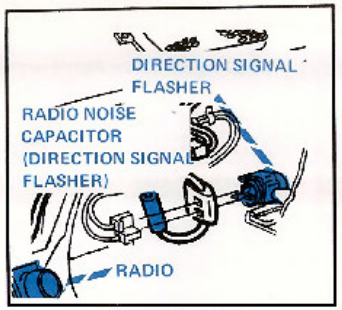

Figure B

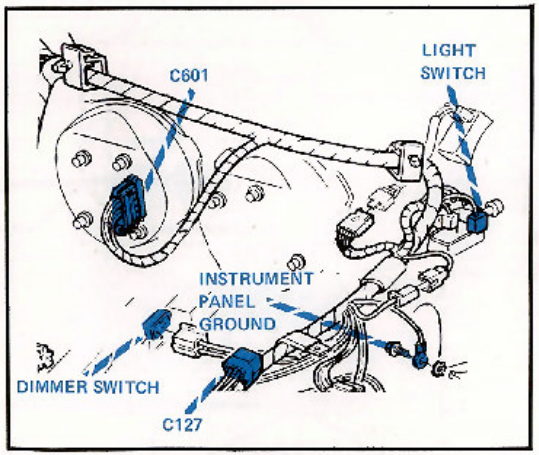

Figure D

COMPONENT LOCATION

Headlights

C601	Figure D	Rear of speedometer/tachometer instrument panel
C115	Figure E	Left side of engine bulkhead
Dimmer Switch	Figure D	On lower left side of steering column
High Beam Indicator Light		Speedometer/tachometer instrument panel
Light Switch	Figure D	Left side of instrument panel

Backup Lights

Backup Switch (Automatic)	Page 6, Figure B	Center console
Backup Switch (Manual)	Figure A	Left side of transmission
C109	Page 6, Figure B	Center Console
C124	Pg. 23, Figure A	Under LH side instrument panel
C139	Figure E	Near left rocker arm cover
DIR SIG BK UP Fuse	Figure C	Fuse panel
Direction Signal Flasher	Figure B	Behind map pocket

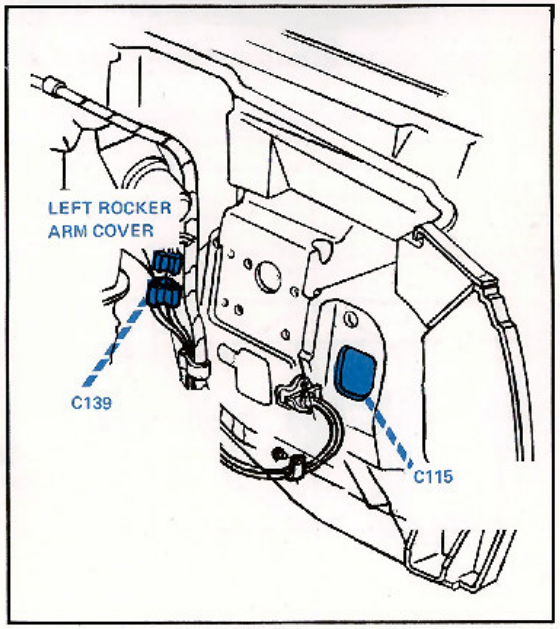

Figure E

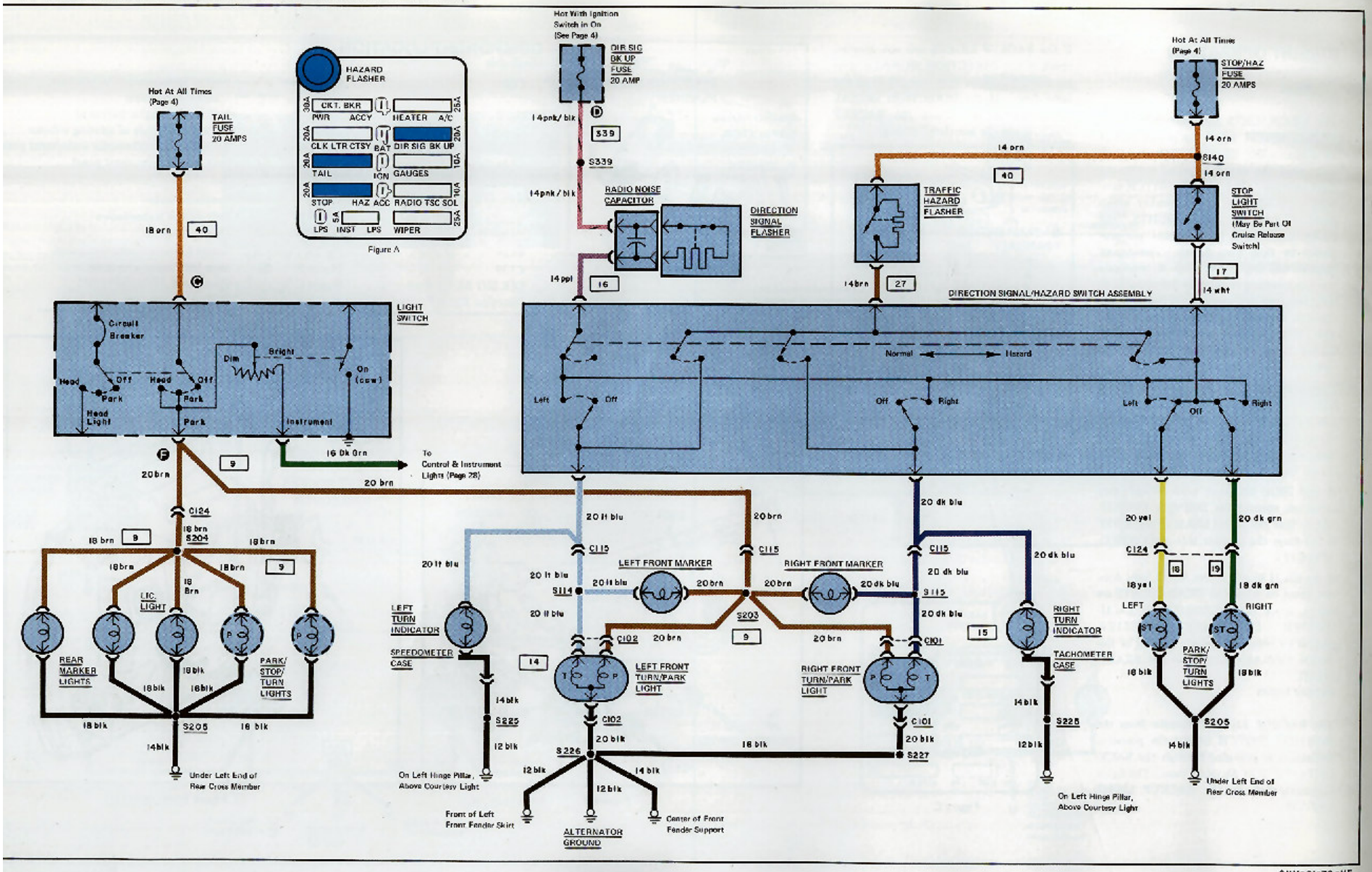
Hot With Ignition Switch In On (See Page 4)
DIR SIG BK UP FUSE 20 AMP
Hot At All Times (Page 4)
STOP/HAZ FUSE 20 AMPS
Hot At All Times (Page 4)
TAIL FUSE 20 AMPS
HAZARD FLASHER
CKT. BKR PWR
ACCY
HEATER
A/C
CLK LTR CTSY
BAT
DIR SIG BK UP
TAIL
IGN
GAUGES
STOP
HAZ
ACC
RADIO TSC SOL
LPS
INST
LPS
WIPER
Figure A
14 pnk/blk
339
S339
14 pnk/blk
RADIO NOISE CAPACITOR
DIRECTION SIGNAL FLASHER
14 ppl
16
14 orn
40
S140
14 orn
TRAFFIC HAZARD FLASHER
14 brn
27
STOP LIGHT SWITCH (May Be Part Of Cruise Release Switch)
17
14 wht
DIRECTION SIGNAL/HAZARD SWITCH ASSEMBLY
Normal
Hazard
Left
Off
Off
Right
Left
Off
Right
18 orn
40
LIGHT SWITCH
Circuit Breaker
Head
Off
Park
Head
Off
Park
Head Light
Park
Dim
Bright
Instrument
On (cow)
16 Dk Grn
To Control & Instrument Lights (Page 28)
20 brn
9
20 brn
C124
18 brn
S204
18 brn
9
18 brn
18 brn
18 brn
9
18 Brn
LIC. LIGHT
REAR MARKER LIGHTS
18 blk
18 blk
PARK/ STOP/ TURN LIGHTS
18 blk
S205
18 blk
14 blk
Under Left End of Rear Cross Member
20 lt blu
20 lt blu
S114
20 lt blu
LEFT TURN INDICATOR
SPEEDOMETER CASE
14
14 blk
S225
12 blk
On Left Hinge Pillar, Above Courtesy Light
C115
LEFT FRONT MARKER
20 lt blu
20 brn
C102
20 brn
LEFT FRONT TURN/PARK LIGHT
C102
20 blk
S226
12 blk
14 blk
12 blk
Front of Left Front Fender Skirt
ALTERNATOR GROUND
Center of Front Fender Support
C115
RIGHT FRONT MARKER
20 brn
20 dk blu
S115
20 dk blu
S203
9
20 brn
C101
RIGHT FRONT TURN/PARK LIGHT
C101
20 blk
S227
18 blk
20 dk blu
20 dk blu
15
RIGHT TURN INDICATOR
TACHOMETER CASE
14 blk
S226
12 blk
On Left Hinge Pillar, Above Courtesy Light
20 yel
C124
18 yel
LEFT
16
PARK/ STOP/ TURN LIGHTS
16 blk
S205
14 blk
Under Left End of Rear Cross Member
20 dk grn
19
18 dk grn
RIGHT
18 blk
CHV-01-78-VF

CIRCUIT OPERATION

Direction Signals

The DIRECTION SIGNAL LIGHTS are powered by the 20 amp DIR SIG BK UP FUSE. Voltage is available when the IGNITION SWITCH is in the On position. When the DIRECTION SIGNAL SWITCH is in the Off position, the DIRECTION SIGNAL FLASHER output voltage on circuit 16 has no current path to ground.

Moving the DIRECTION SIGNAL SWITCH to the Right position applies voltage from circuit 16 to circuits 15 and 19. The switch also disconnects circuit 19 from the BRAKE LIGHT switch and supplies the RIGHT STOP/TURN filament from the DIRECTION SIGNAL FLASHER.

Circuit 15 supplies the following lights:

1. RIGHT TURN INDICATOR
2. RIGHT FRONT TURN
3. RIGHT FRONT MARKER

The combined current from these lights heats the element in the DIRECTION SIGNAL FLASHER and causes its contact to open. When the element cools, the FLASHER closes and again powers the lights. This blinking continues until the lights are turned off and the element can remain cool.

The RIGHT FRONT MARKER LIGHT is connected between circuit 15 and circuit 9. How the marker operates depends on whether circuit 9 is On or Off.

Circuit 9 has many filaments connected in parallel to ground, and provides a low-resistance path for current. If circuit 9 is not powered by the LIGHT SWITCH, the RIGHT FRONT MARKER current will flow from circuit 15 to circuit 9, then through the many filaments to ground. This will cause the marker to blink together with the turn light.

With the PARKING LIGHTS On, circuit 9 will be at 12 volts. Current will flow through the RIGHT FRONT MARKER to circuit 15 and then to ground through the RIGHT FRONT TURN filament and the RIGHT TURN INDICATOR. When the FLASHER blinks On, 12 volts is supplied directly to circuit 15. Now both terminals of the RIGHT FRONT MARKER are at 12 volts, making the marker go out. By this method, the FRONT MARKER will blink Off when the FRONT TURN blinks On.

Hazard Warning

The HAZARD WARNING circuit is powered at all times through the 20 amp STOP/HAZARD FUSE. When the HAZARD SWITCH is in the Normal position, the TRAFFIC HAZARD FLASHER output voltage on circuit 27 has no current path to ground.

When the HAZARD SWITCH is pushed in to the HAZARD position, all four TURN filaments are connected to the TRAFFIC HAZARD FLASHER. The parallel path through these four filaments heats the TRAFFIC HAZARD FLASHER element. When the element heats, the FLASHER CONTACT closes and applies full power to the filaments. With the contact closed, the element is bypassed. When the element cools, the FLASHER contact opens again and turns Off the four TURN LIGHTS. This blinking continues until the HAZARD SWITCH is pulled back to the Normal position.

When the HAZARD FLASHER circuit is operating, the STOP LIGHT SWITCH can also bypass the TRAFFIC HAZARD FLASHER and stop it from blinking. The four TURN LIGHTS will stay On until the BRAKE pedal is released. The FRONT MARKERS will also come On during HAZARD FLASHER operation when the PARKING LIGHTS are Off.

Stoplights

The STOPLIGHTS are powered by the 20 amp STOP HAZARD fuse, which is hot at all times. When the STOP LIGHT SWITCH is closed by depressing the brake pedal, voltage is applied to circuit 17. If the DIRECTION SIGNAL SWITCH is Off, both STOP/TURN filaments come On. If the DIRECTION SIGNAL SWITCH is turned for left or right turns, the corresponding STOP/TURN filament is disconnected from circuit 17, and only one STOP/TURN filament is powered by the STOP LIGHT SWITCH.

COMPONENT LOCATION

C115	Figure B	Engine bulkhead
C124	Figure B	Under LH side instrument panel
Direction Signal Flasher	Figure C	Behind map pocket
Direction Signal/Hazard Switch		Steering column
HAZARD/STOP Fuse	Page 10, Figure A	Fuse panel
Light Switch		Control panel
Radio Noise Capacitor (Direction Signal Flasher)	Figure C	Attached to directional signal flasher
Stop Light Switch	Figure B	Bracket at top of brake pedal
TAIL Fuse	Page 10, Figure A	Fuse panel
Traffic Hazard Flasher	Page 10, Figure A	Fuse panel

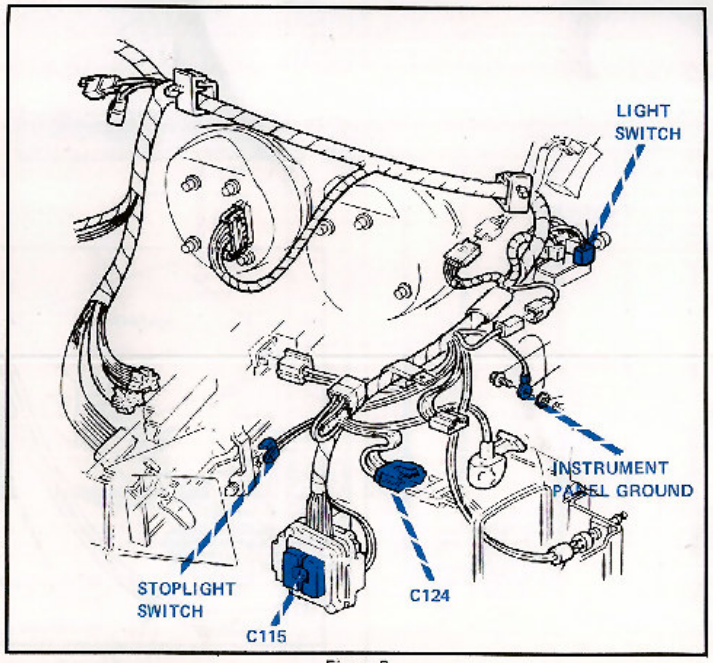

Figure B

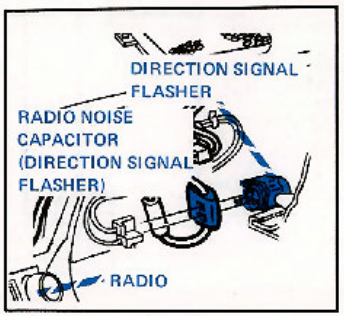

Figure C

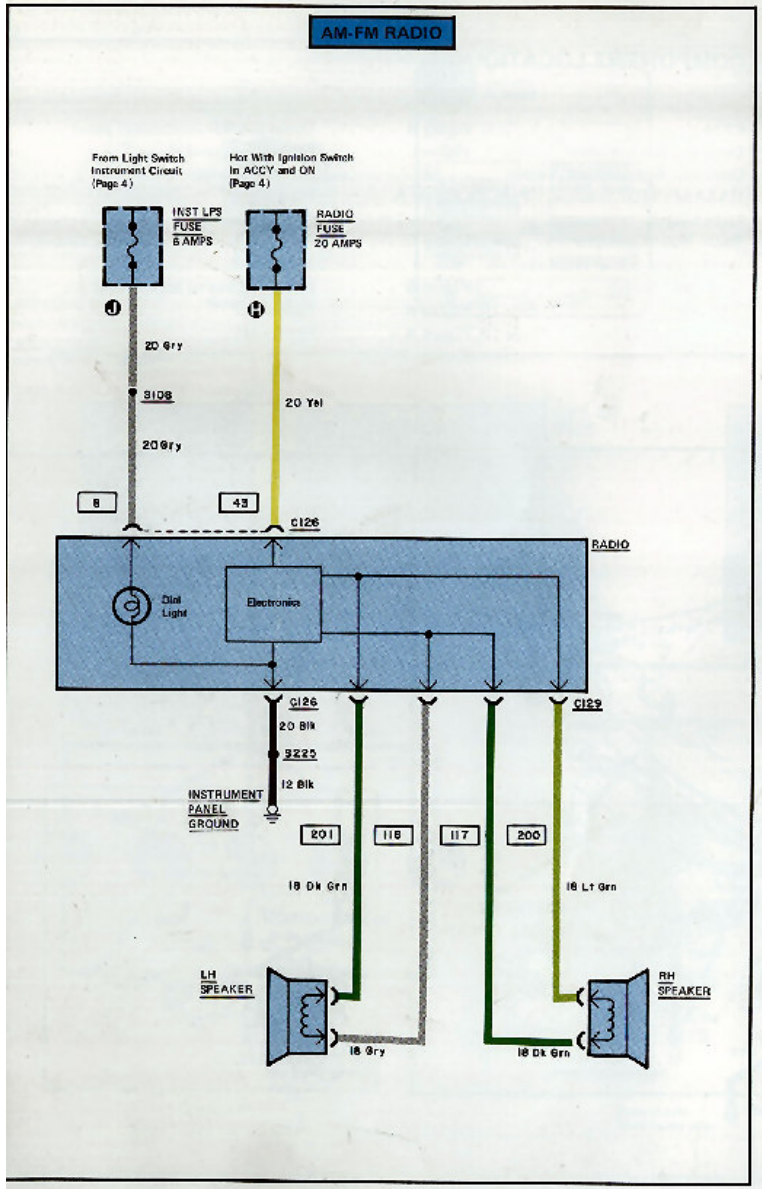

CIRCUIT OPERATION

Radio

The RADIO DIAL LIGHT is powered through the 5 amp INST LPS fuse. Its brilliance is controlled by the DIMMER RHEOSTAT mounted on the LIGHT SWITCH. The RADIO ELECTRONICS are powered through the 10 amp RADIO fuse. If you suspect an open SPEAKER or wiring leading from the RADIO to the SPEAKER, test using your ohmmeter. A continuous circuit will read 3 to 4 ohms and you will hear a "pop" from the speaker.

See Figure B for installation, AM adjustment and stereo checkout.

COMPONENT LOCATION

INST LPS Fuse	Page 13, Figure A	Fuse panel
RADIO Fuse	Page 13, Figure A	Fuse panel
C126	Figure D	Rear of radio
C127	Page 9, Figure D	Left side instrument panel
C128	Figure D	Rear of radio
C129	Figure D	Rear of radio

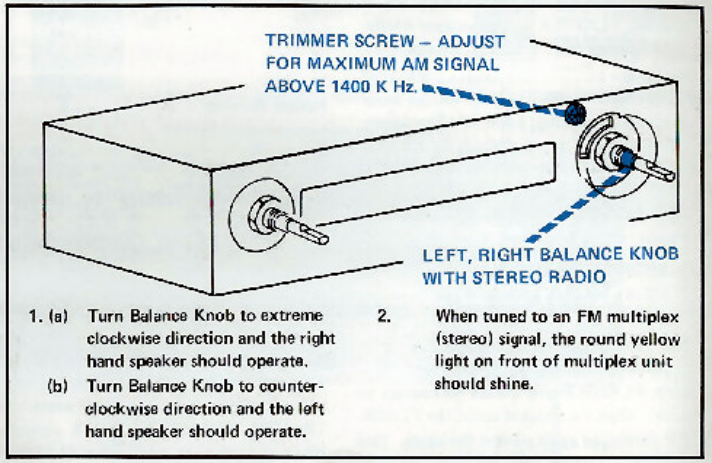

1. (a) Turn Balance Knob to extreme clockwise direction and the right hand speaker should operate.
   (b) Turn Balance Knob to counter-clockwise direction and the left hand speaker should operate.
2. When tuned to an FM multiplex (stereo) signal, the round yellow light on front of multiplex unit should shine.

Figure B

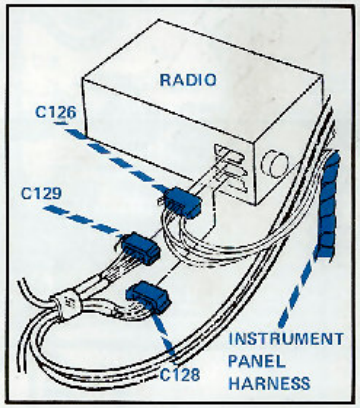

Figure D

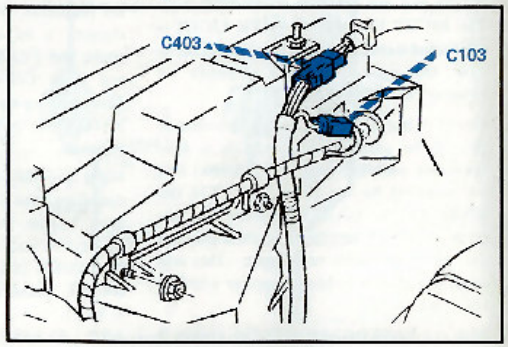

Figure C

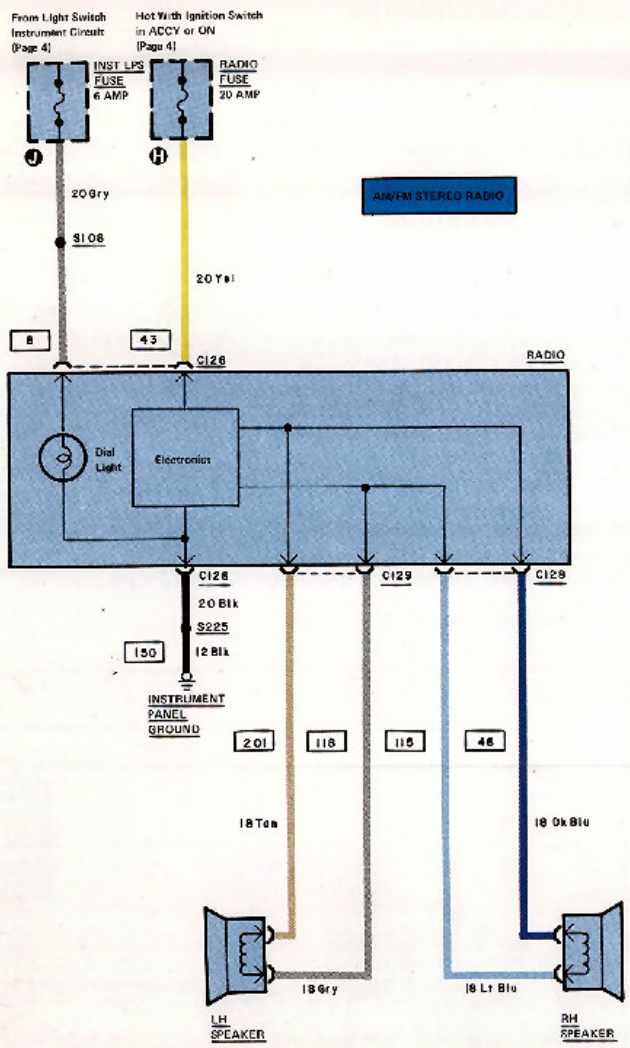

AM/FM STEREO RADIO

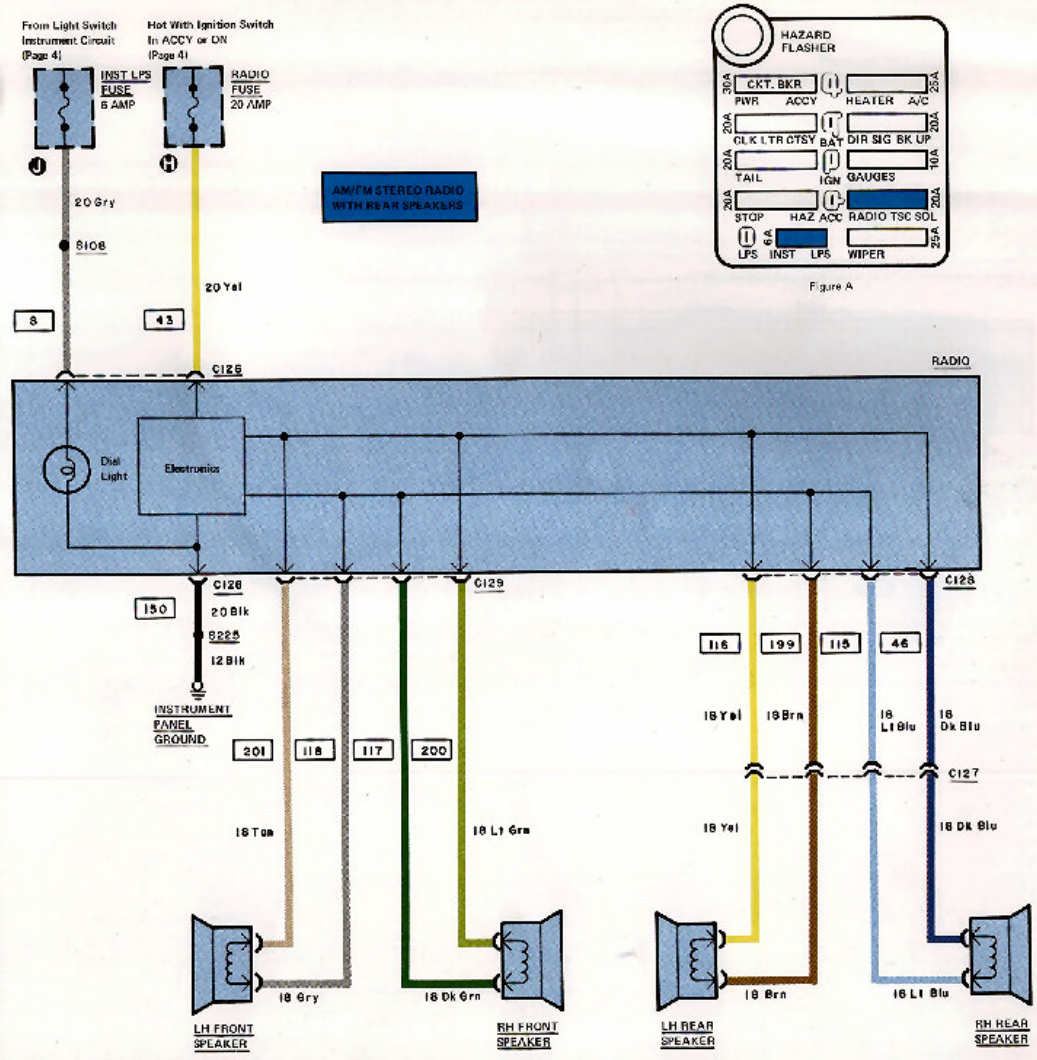

AM/FM STEREO RADIO WITH REAR SPEAKERS

Figure A

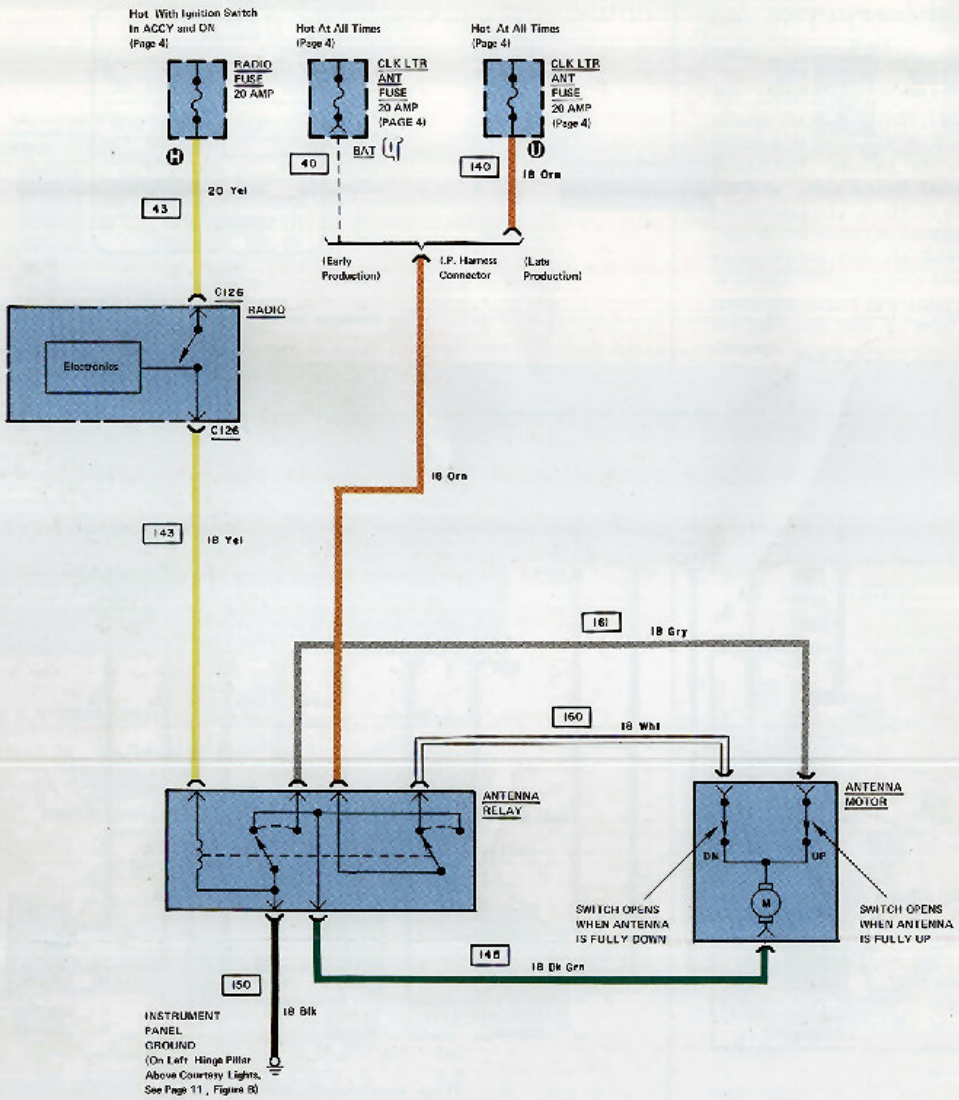

COMPONENT LOCATION

Antenna Motor		Power antenna assembly in left rear fenderwell
Antenna Relay	Figure B	Rear center console
CLK LTR ANT Fuse	Figure A	Fuse panel
RADIO Fuse	Figure A	Fuse panel

CIRCUIT OPERATION

The ANTENNA RELAY is energized when the IGNITION KEY is turned to Accessory or On, and the RADIO is turned On. The ANTENNA MOTOR is powered from the CLK LTR ANT FUSE through the switched relay contacts, and the antenna extends upward. When the antenna is fully extended, the UP switch opens and antenna motor power is interrupted.

When the IGNITION KEY or the RADIO is turned off, the ANTENNA RELAY is de-energized. The ANTENNA MOTOR is powered from the CLK LTR ANT FUSE through the normally closed relay contacts, and the antenna retracts. When the antenna is fully retracted, the DN switch opens and antenna motor power is interrupted.

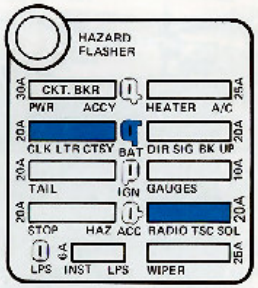

Figure A

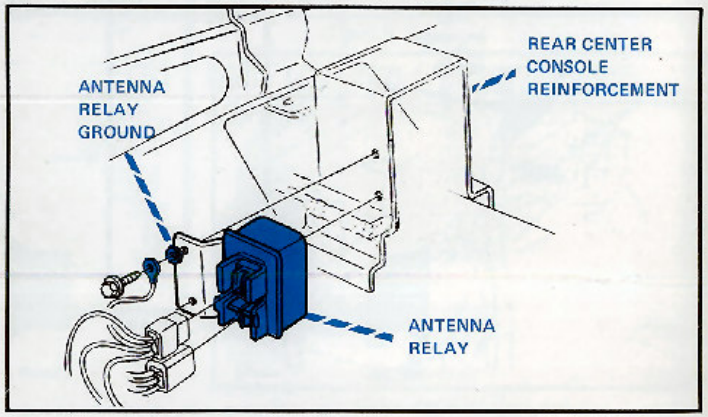

Figure B

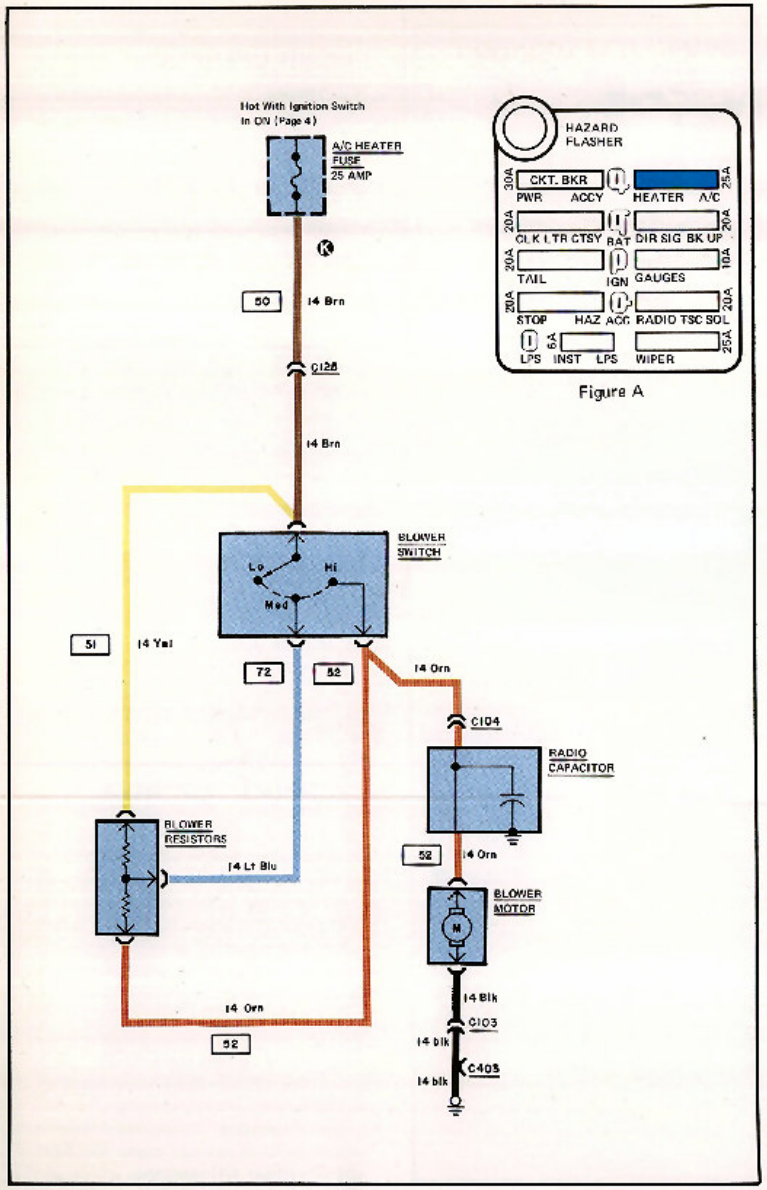

Figure A

CIRCUIT OPERATION

Heater

The HEATER BLOWER is powered through the 25 amp HEATER A/C Fuse. Blower speed is set by adding resistance in series with the BLOWER MOTOR. The more resistance added the slower the BLOWER MOTOR speed. The BLOWER MOTOR runs whenever the IGNITION SWITCH is On.

COMPONENT LOCATION

Blower Motor	Figure B	Plenum
Blower Resistors	Figure D	Plenum
Blower Switch	Figure C	Part of heater control
C103	Page 12, Figure C	Under hood anti theft switch
C104	Figure B	Near radio capacitor
C125	Figure E	Left side console near cigar lighter
C403	Page 12, Figure C	Near anti theft hood switch
HEATER A/C Fuse	Figure A	Fuse panel
Radio Capacitor	Figure B	Blower motor flange

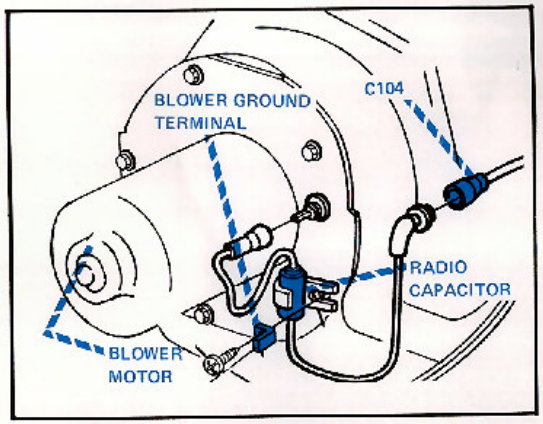

Figure B

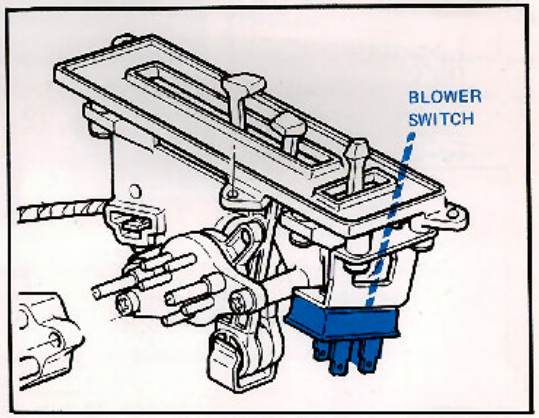

Figure C

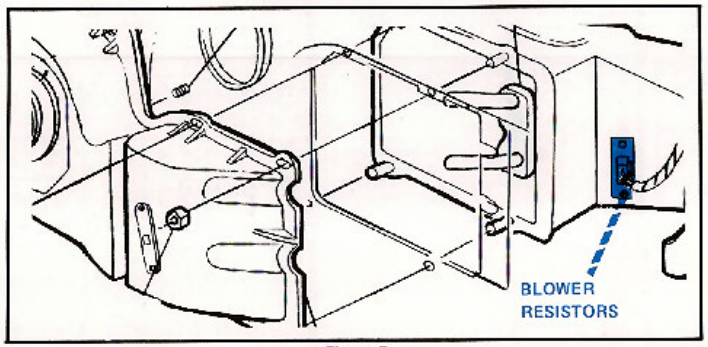

Figure D

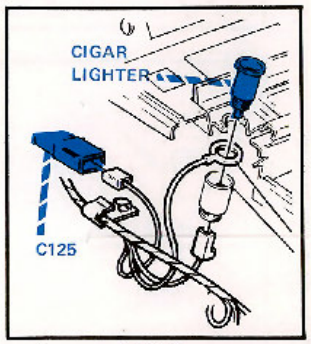

Figure E

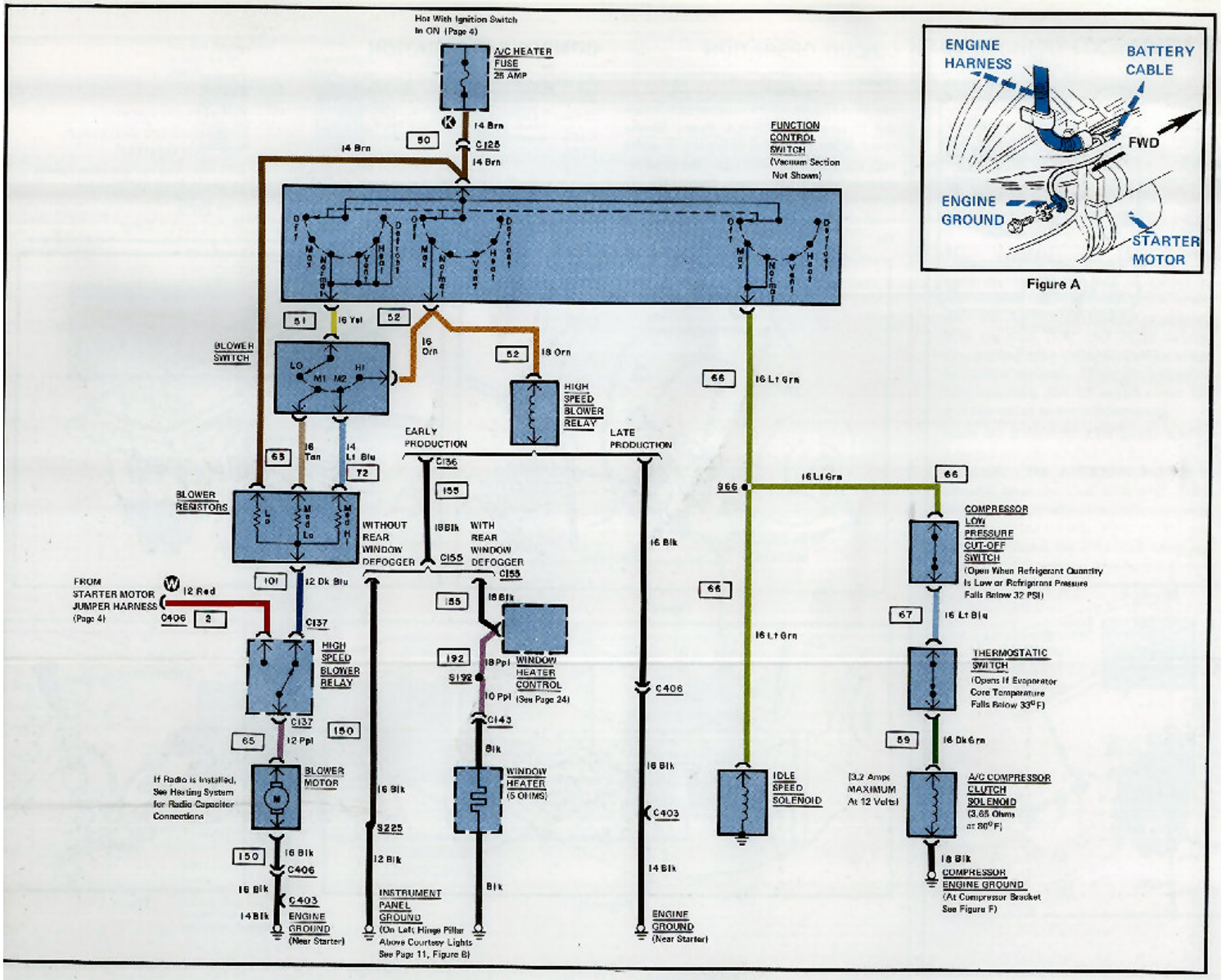

Figure A

CIRCUIT OPERATION

A/C - Heating

The A/C - HEATER circuit is powered through the 25 amp A/C HEATER fuse. The FUNCTION CONTROL SWITCH provides power to the 4 speed BLOWER MOTOR in all positions except Off. In the Off position, a by-pass circuit operates the BLOWER MOTOR in Lo speed whenever the IGNITION KEY is in the On position.

When the REAR WINDOW DEFOGGER is On, the BLOWER MOTOR will not operate in High Speed. The HIGH SPEED BLOWER RELAY cannot energize when the REAR WINDOW DEFOGGER is on because 12 volts is applied to the ground side of the HIGH SPEED BLOWER RELAY by the 192 circuit.

When the FUNCTION CONTROL SWITCH is set to Max (Cool) the HIGH SPEED BLOWER RELAY is energized (circuit 52) and voltage is supplied directly to the BLOWER MOTOR regardless of the position of the BLOWER SWITCH. The BLOWER MOTOR also operates at high speed when the FUNCTION CONTROL SWITCH is set to Normal (Cool), Vent, Heat or Defrost and the BLOWER SWITCH is set to Hi.

The A/C CLUTCH is controlled by the FUNCTION CONTROL SWITCH, COMPRESSOR LOW PRESSURE CUT-OFF SWITCH. The FUNCTION CONTROL SWITCH causes compressor operation during Max and Normal air conditioning. The COMPRESSOR LOW PRESSURE CUT-OFF SWITCH is a normally closed safety switch that opens to prevent compressor operation if refrigerant pressure is lost. Operation without refrigerant can damage the compressor. The THERMOSTATIC SWITCH prevents ice buildup on the evaporator coil by opening below 33°F.

The IDLE SPEED SOLENOID increases engine throttle setting whenever the A/C system is operating. The increased throttle setting results in constant engine idle RPM with or without A/C operation.

CHV-01-78-VF

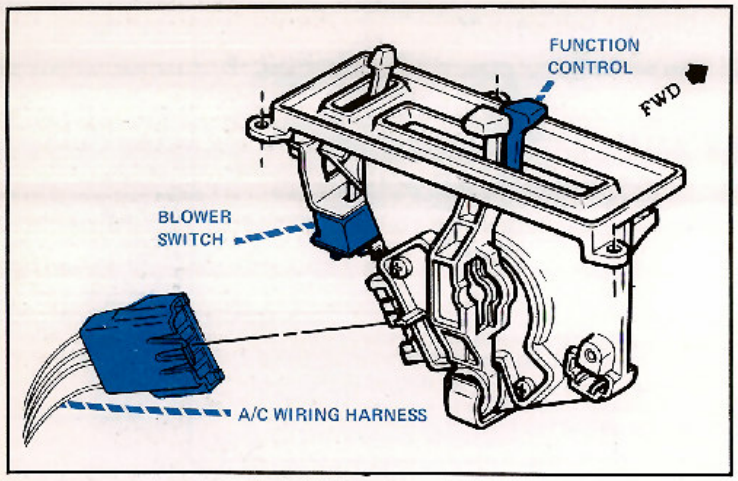

Figure A

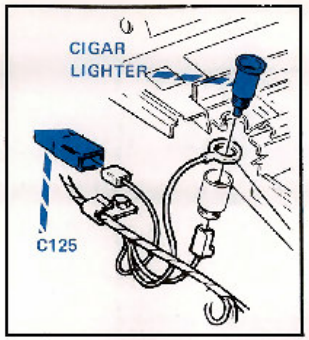

Figure B

COMPONENT LOCATION

A/C Compressor Clutch Solenoid	Figure F	Part of A/C clutch
Blower Motor	Figure C	A/C plenum
Blower Resistors	Figure C	A/C plenum
Blower Switch	Figure A	Part of A/C control
C103	Page 12, Figure C	Near anti theft hood switch
C125	Figure B	Left side console
C136	Figure C, H	High speed blower relay
C137	Figure C, H	High speed blower relay
C155		Attached to I/P harness in console
C403	Page 12, Figure C	Near Anti theft hood switch
C406	Page 5, Figure C	Top of plenum
Compressor Low Pressure Cut-Off Switch	Figure G	RH fender
Function Control Switch	Figure A	Console
HEATER A/C Fuse	Figure D	Fuse panel
High Speed Blower Relay	Figures C and H	Engine bulkhead bracket
Idle Speed Solenoid	Figure E	Top left side engine

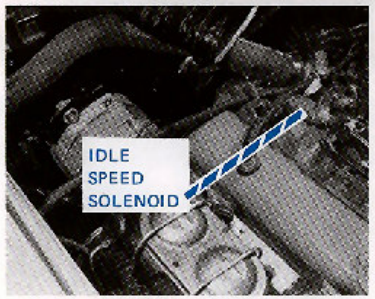

Figure E

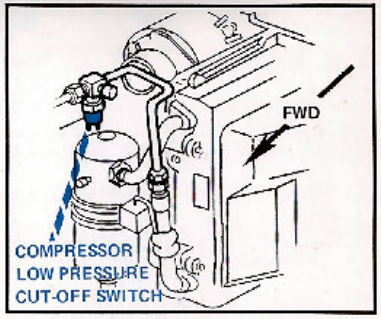

Figure G

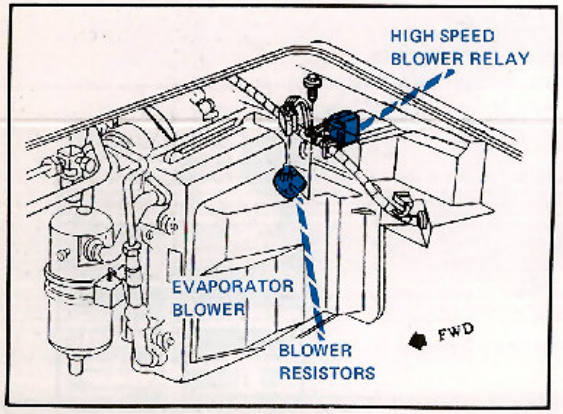

Figure C

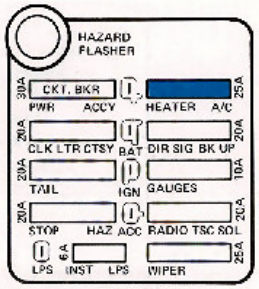

Figure D

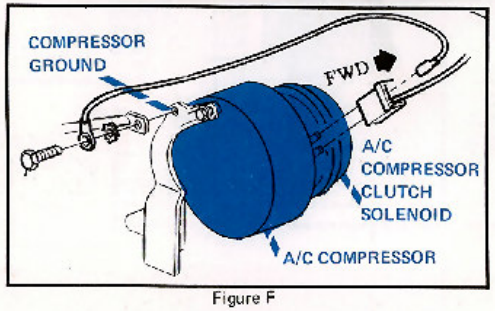

Figure F

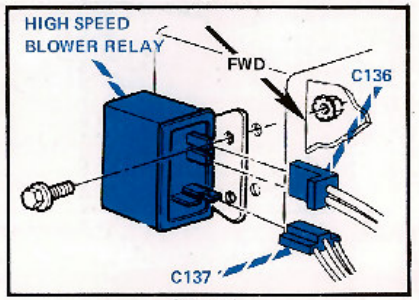

Figure H

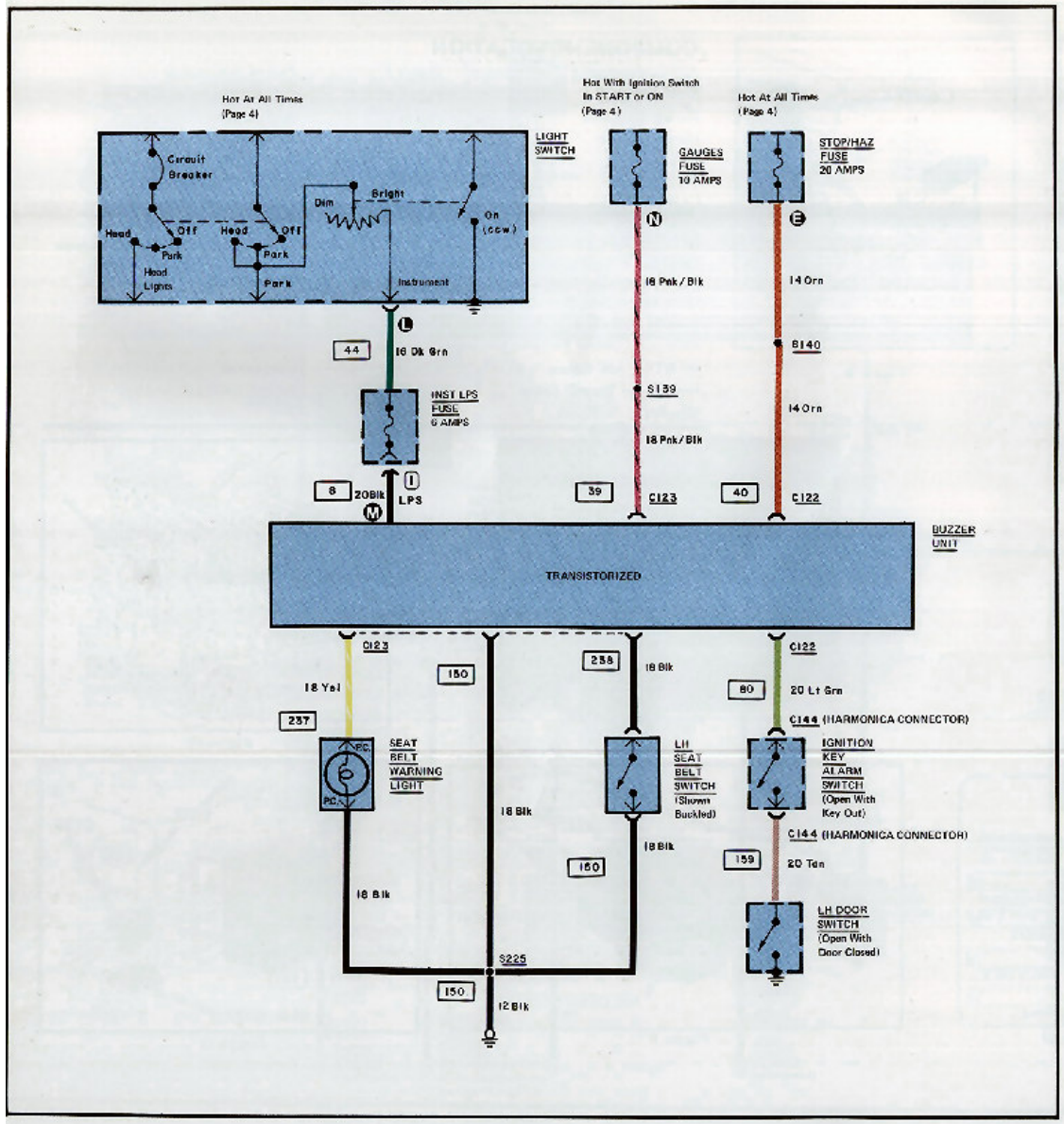

CIRCUIT OPERATION

Seat Belt Warning

The SEAT BELT WARNING LIGHT comes on for 4 to 8 seconds when the IGNITION KEY is turned to On or Start. The WARNING BUZZER sounds for 4 to 8 seconds if the driver has not buckled his seat belt before turning the IGNITION KEY to On or Start.

Headlight Warning

Buzzer sounds if the headlights or parking lights are on when the IGNITION KEY is turned to Off or Lock, and the INSTRUMENT LAMP rheostat is set to any position but off.

Ignition Key Warning

The IGNITION KEY WARNING BUZZER sounds when the driver's door is opened and the IGNITION KEY is turned to Off, Lock (key not removed from lock cylinder), or Accessory position.

One warning buzzer is used for all three circuits. It is located within the BUZZER WARNING UNIT. When troubleshooting these circuits, remove the BUZZER WARNING UNIT and test the wires in CONNECTORS C122 (2 wires), C123 (4 wires) and the permanently attached wire which goes to th INSTRUMENT FUSE.

Circuit 8 should read between 0 and 12 volts with the light switch on to either headlight or parking light position. Voltage depends upon rotation of light switch.

Circuit 39 should read 12 volts with the IGNITION KEY to Start or On position.

Circuit 40 should read 12 volts at all times.

Circuit 150 should read zero ohms to ground at all times.

Circuit 237 should read less than 15 ohms to ground.

Circuit 238 should read zero ohms to ground with the driver's seat buckle unbuckled.

Circuit C122 should read zero ohms to ground with the IGNITION KEY inserted and the DRIVER'S DOOR open.

Circuit 80 should read zero ohms to ground with the IGNITION KEY in place and the LH DOOR open.

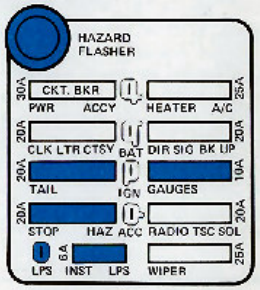

Figure A

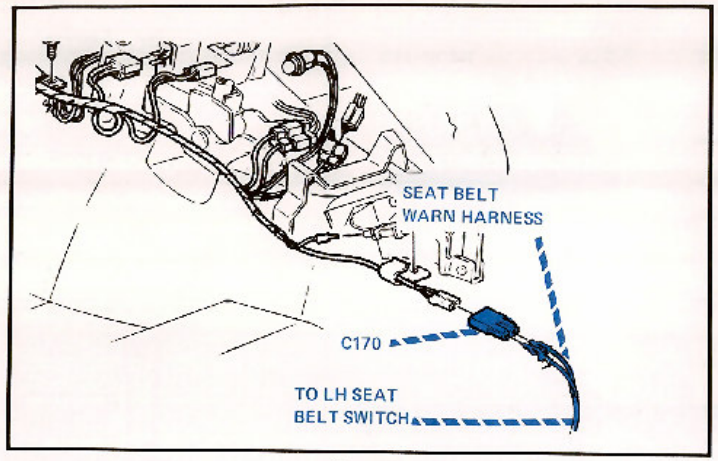

Figure B

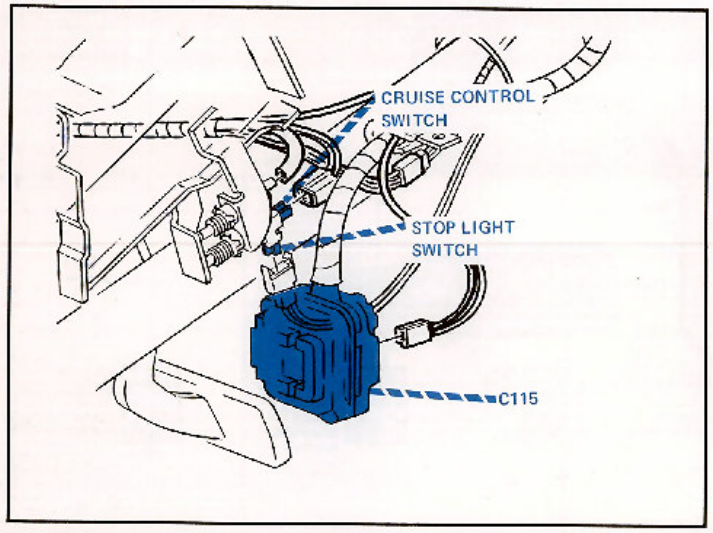

Figure C

COMPONENT LOCATION

Gauges Fuse	Page 18, Figure A	Fuse panel
STOP/HAZARD Fuse	Page 18, Figure A	Fuse panel
INSTRUMENT LIGHTS Fuse	Page 18, Figure A	Fuse panel
Buzzer Warning Unit	Figure D	Fuse panel
LH Seat Belt Switch	Figure B	Center console
Ignition Key Alarm Switch		In steering column
LH Door Switch		LH door hinge pillar

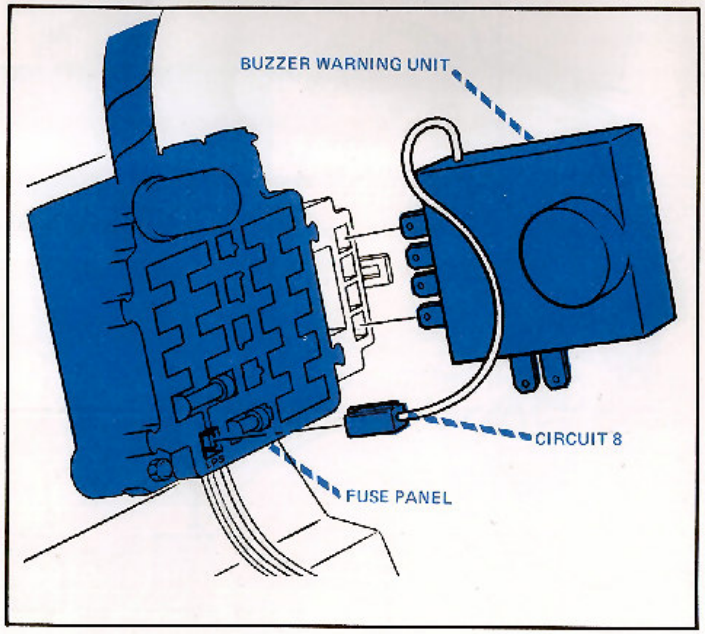

Figure D

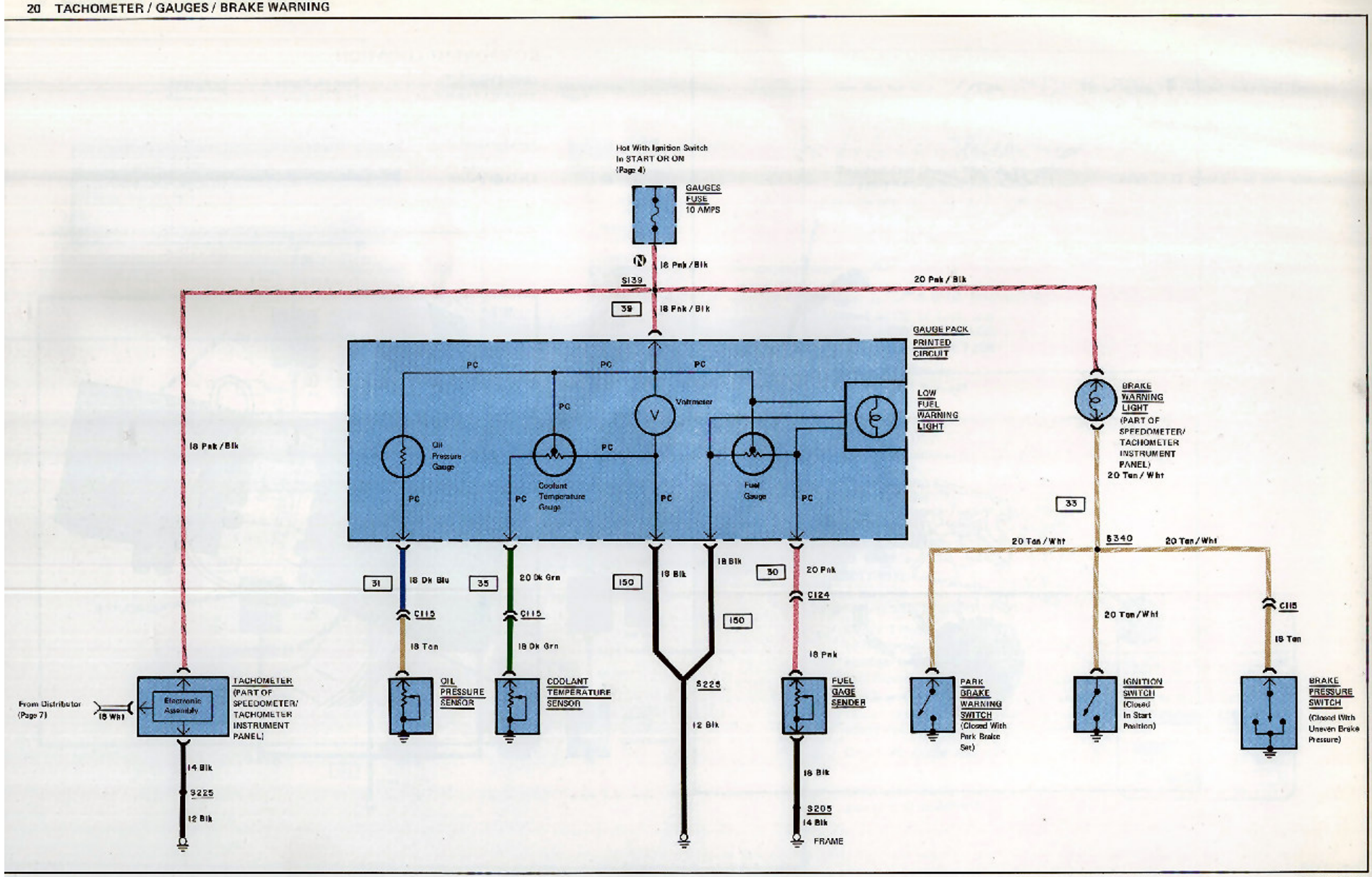
Hot With Ignition Switch In START OR ON (Page 4)
GAUGES FUSE 10 AMPS
18 Pnk/Blk
S139
20 Pnk/Blk
39
18 Pnk/Blk
GAUGE PACK PRINTED CIRCUIT
PC
Voltmeter
LOW FUEL WARNING LIGHT
Oil Pressure Gauge
Coolant Temperature Gauge
Fuel Gauge
BRAKE WARNING LIGHT (PART OF SPEEDOMETER/ TACHOMETER INSTRUMENT PANEL)
20 Tan/Wht
33
18 Pnk/Blk
20 Tan/Wht
S340
20 Tan/Wht
31
18 Dk Blu
35
20 Dk Grn
150
18 Blk
18 Blk
30
20 Pnk
C124
C115
18 Tan
18 Dk Grn
150
18 Pnk
C115
18 Tan
S225
12 Blk
From Distributor (Page 7)
18 Wht
Electronic Assembly
TACHOMETER (PART OF SPEEDOMETER/ TACHOMETER INSTRUMENT PANEL)
OIL PRESSURE SENSOR
COOLANT TEMPERATURE SENSOR
FUEL GAGE SENDER
PARK BRAKE WARNING SWITCH (Closed With Park Brake Set)
IGNITION SWITCH (Closed In Start Position)
BRAKE PRESSURE SWITCH (Closed With Uneven Brake Pressure)
14 Blk
S225
12 Blk
18 Blk
S205
14 Blk
FRAME

CHV-01-78-VF

CIRCUIT OPERATION

The TACHOMETER, GAUGES and BRAKE WARNING LIGHT are powered through the 10 amp GAUGES FUSE when the IGNITION SWITCH is in Start or On.

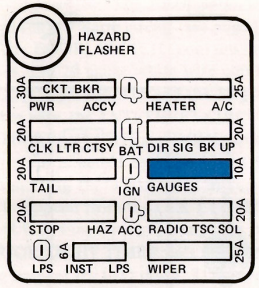

Figure A

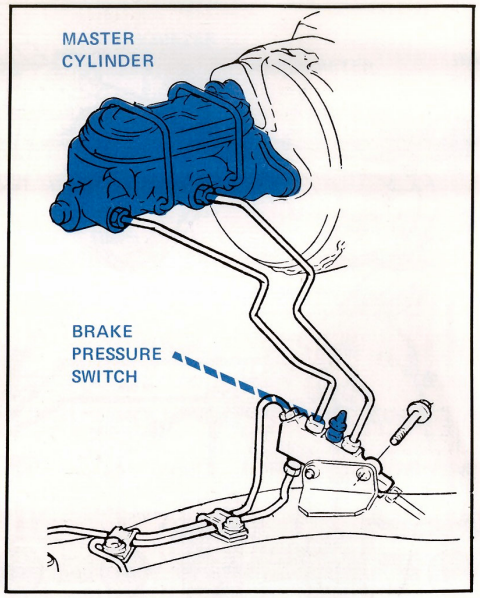

Figure B

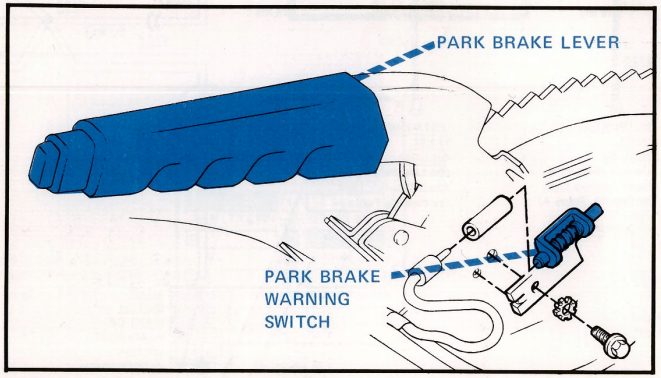

Figure C

COMPONENT LOCATION

Brake Pressure Switch	Figure B	On frame below brake booster
C115	Figure D	Engine bulkhead
Coolant Temperature Sender	Figure D	Left side engine
Fuel Gauge Sender		Fuel tank
GAUGES Fuse	Figure A	Fuse panel
Oil Pressure Sender	Figure D	Left side engine
Park Brake Warning Switch	Figure C	Center console
Printed Circuit Board		Instrument panel

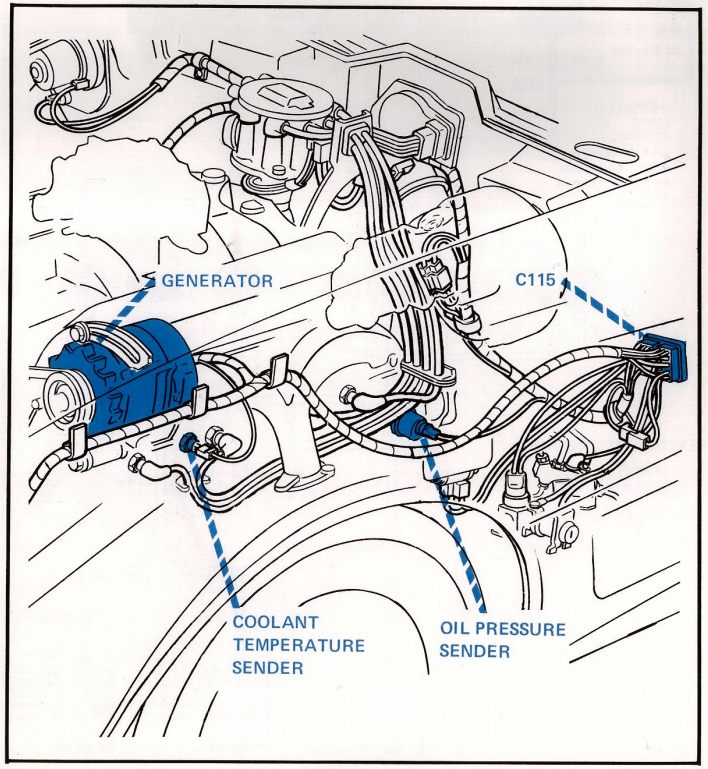

Figure D

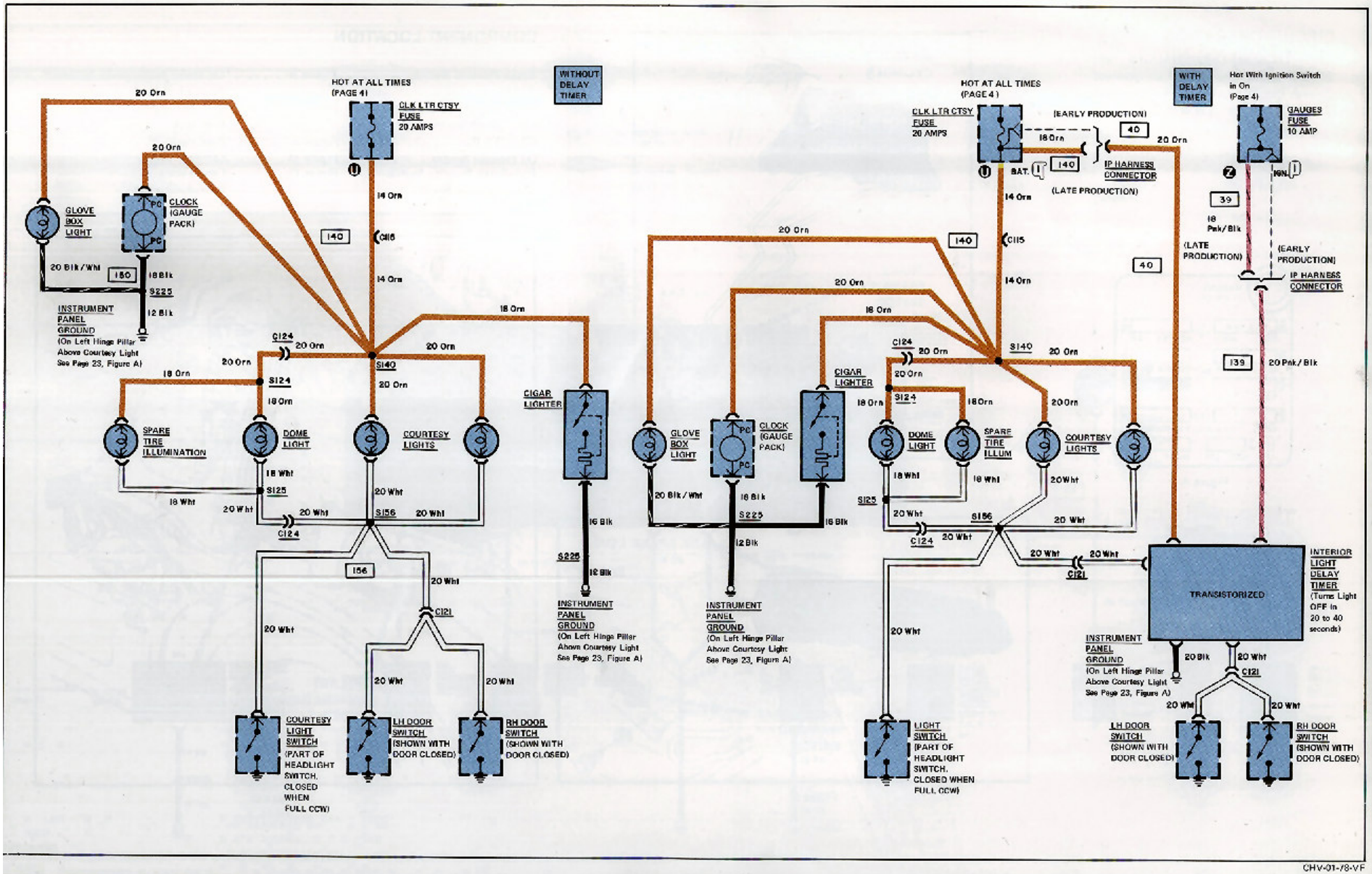
WITHOUT DELAY TIMER
HOT AT ALL TIMES (PAGE 4)
CLK LTR CTSY FUSE 20 AMPS
20 Orn
14 Orn
140
C115
GLOVE BOX LIGHT
CLOCK (GAUGE PACK)
20 Blk/Wht
150
18 Blk
S225
12 Blk
INSTRUMENT PANEL GROUND (On Left Hinge Pillar Above Courtesy Light See Page 23, Figure A)
C124
S140
S124
18 Orn
SPARE TIRE ILLUMINATION
DOME LIGHT
COURTESY LIGHTS
18 Wht
S125
20 Wht
S156
156
C121
CIGAR LIGHTER
16 Blk
COURTESY LIGHT SWITCH (PART OF HEADLIGHT SWITCH, CLOSED WHEN FULL CCW)
LH DOOR SWITCH (SHOWN WITH DOOR CLOSED)
RH DOOR SWITCH (SHOWN WITH DOOR CLOSED)
WITH DELAY TIMER
Hot With Ignition Switch in On (Page 4)
GAUGES FUSE 10 AMP
(EARLY PRODUCTION)
40
IP HARNESS CONNECTOR
(LATE PRODUCTION)
BAT.
IGN.
39
18 Pnk/Blk
(LATE PRODUCTION)
(EARLY PRODUCTION)
139
20 Pnk/Blk
TRANSISTORIZED
INTERIOR LIGHT DELAY TIMER (Turns Light OFF In 20 to 40 seconds)
20 Blk
LIGHT SWITCH (PART OF HEADLIGHT SWITCH, CLOSED WHEN FULL CCW)

CHV-01-78-VF

CIRCUIT OPERATION

Courtesy Lights

The COURTESY LIGHTS are powered at all times through the CLK LTR CTSY Fuse. Notice that both the CLOCK and CIGAR LIGHTER are also powered from the CLK LTR CTSY Fuse. There are three switches within the LH DOOR SWITCH. All close to ground when the door is opened. The 20 gauge white wire controls the COURTESY LIGHTS. The 18 gauge light blue wire controls the ANTI THEFT CIRCUIT (see page 18). The 20 gauge tan wire is part of the key alarm circuit (see page 18). The RH DOOR SWITCH contains two switches, the 20 gauge white wire controls the COURTESY LIGHTS and the 18 gauge light blue wire, the ANTI THEFT CIRCUIT. The COURTESY LIGHT and DOME LIGHT delay option is added by separating C121 and connecting the white wires as shown. Power is supplied from the CLK LTR CTSY and GAUGES Fuses using splicing taps. The INTERIOR LIGHT TIMER uses an internal heating element for light delay. The interior lights turn on immediately when either door is opened. The lights remain on for 10 to 20 seconds after both doors are closed.

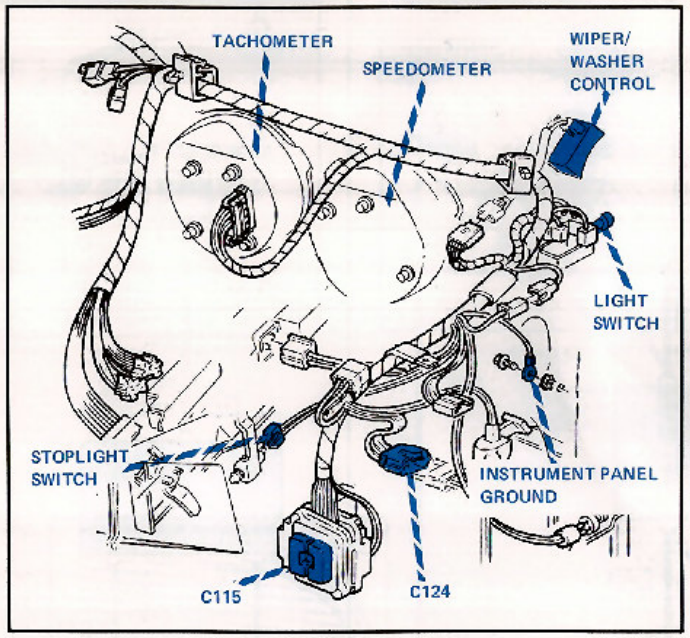

Figure A

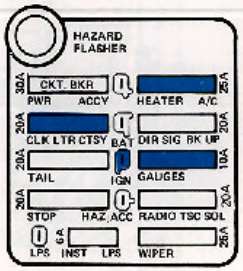

Figure B

COMPONENT LOCATION

C115	Figure A	Behind fuse block
C124	Figure A	Left instrument panel
Cigar Lighter		Center console
CLK LTR CTSY Fuse	Figure B	Fuse panel
GAUGES Fuse	Figure B	Fuse Panel
Courtesy Switch		Door hinge pillar
Interior Light Timer		In Instrument Panel harness Above Speedometer/Tachometer

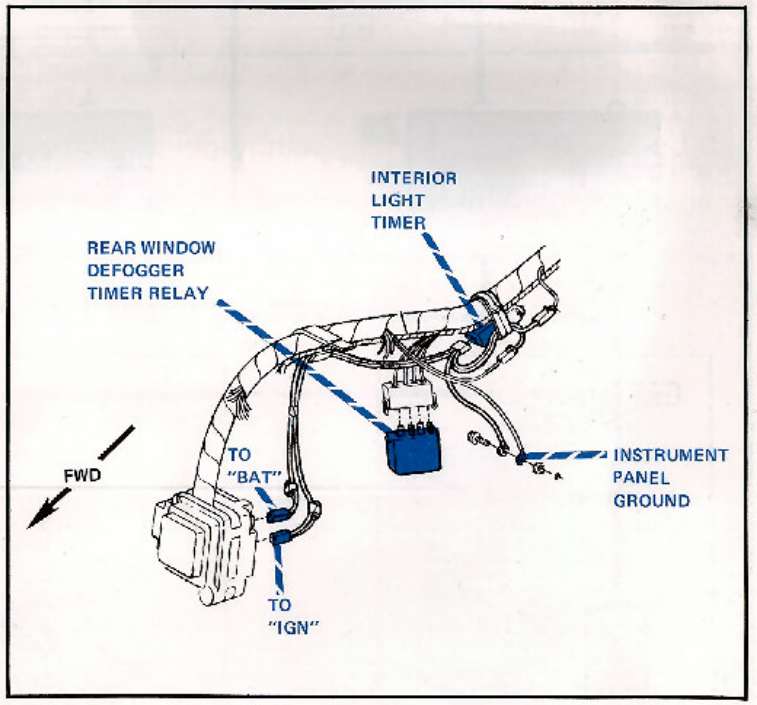

Figure C

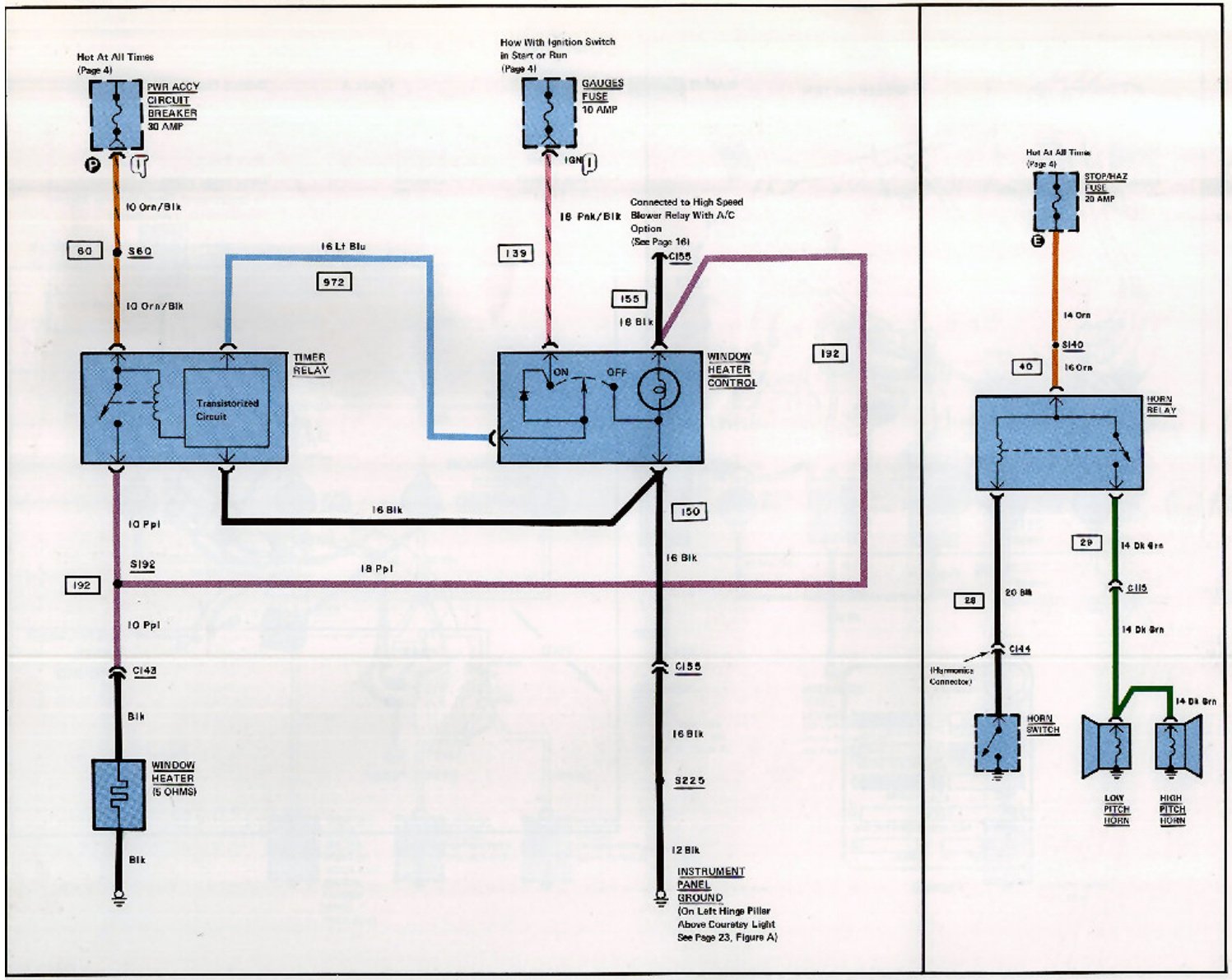

CIRCUIT OPERATION

Rear Window Defogger

The REAR WINDOW DEFOGGER consists of a heater grid on the rear window, a WINDOW HEATER CONTROL with INDICATOR LIGHT and center-off control switch, and a TIMER RELAY. When the IGNITION SWITCH is turned to Start or On, power is available to the WINDOW HEATER CONTROL. When the CONTROL SWITCH is moved to the On position, the relay in the TIMER RELAY closes and applies power to the WINDOW HEATER. (The CONTROL SWITCH is spring-loaded and automatically returns to the center position when released.) After approximately 10 minutes, the TRANSISTORIZED TIME DELAY CIRCUIT in the TIMER RELAY automatically turns the WINDOW HEATER Off. Moving the CONTROL SWITCH to the Off position will turn the WINDOW HEATER off at any time. When the WINDOW HEATER is On, 12 volts is applied to the ground side of the A/C HIGH SPEED RELAY and it will not energize. The A/C BLOWER cannot be operated in High Speed when the REAR WINDOW DEFOGGER is On.

Horn

The HORN CIRCUIT consists of the HORN RELAY, HORN SWITCH and the HIGH and LOW PITCH HORNS. Power is fed to the HORN RELAY at all times. When the HORN SWITCH is depressed, the relay coil is grounded, its coil is energized, and its contacts close. Power is then fed through the relay contacts directly to the horns.

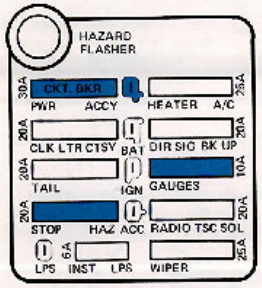

Figure A

Figure B

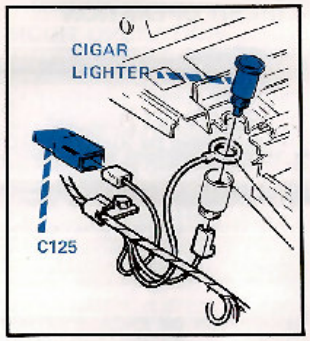

Figure C

COMPONENT LOCATION

Rear Window Defogger

C143	Figure E	Left side
RADIO TCS SOL Fuse	Figure A	Fuse panel
Window Heater		Rear window
Window Heater Control		Left side console

Horn

C144	Figure B	Lower steering column
C115	Figure G	Engine bulkhead
Horns	Figure D	Near head lights
Horn Relay	Figure G	Above fuse panel
Horn Switch		Steering wheel

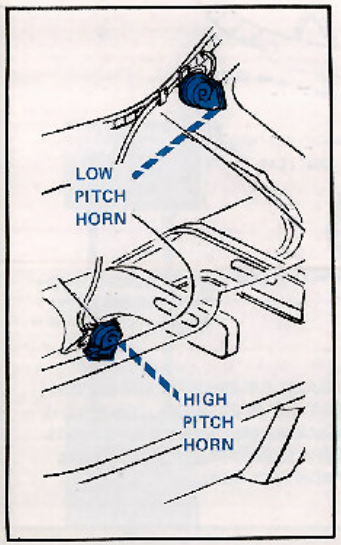

Figure D

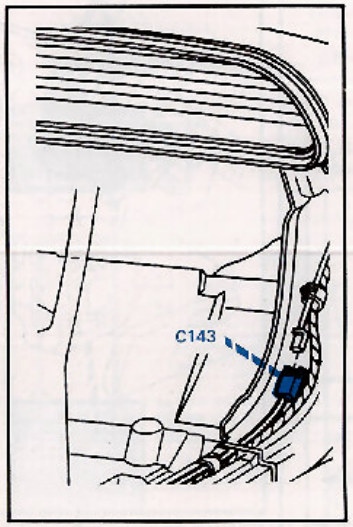

Figure E

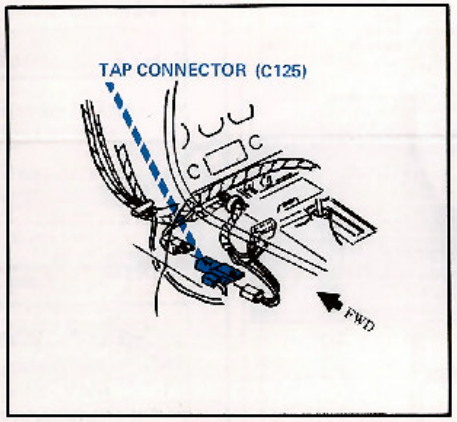

Figure F

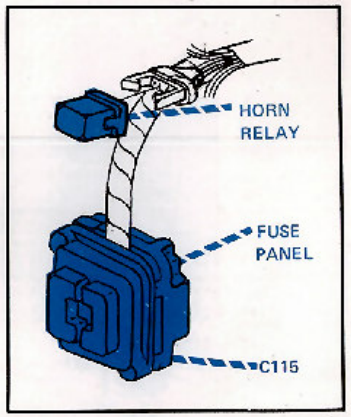

Figure G

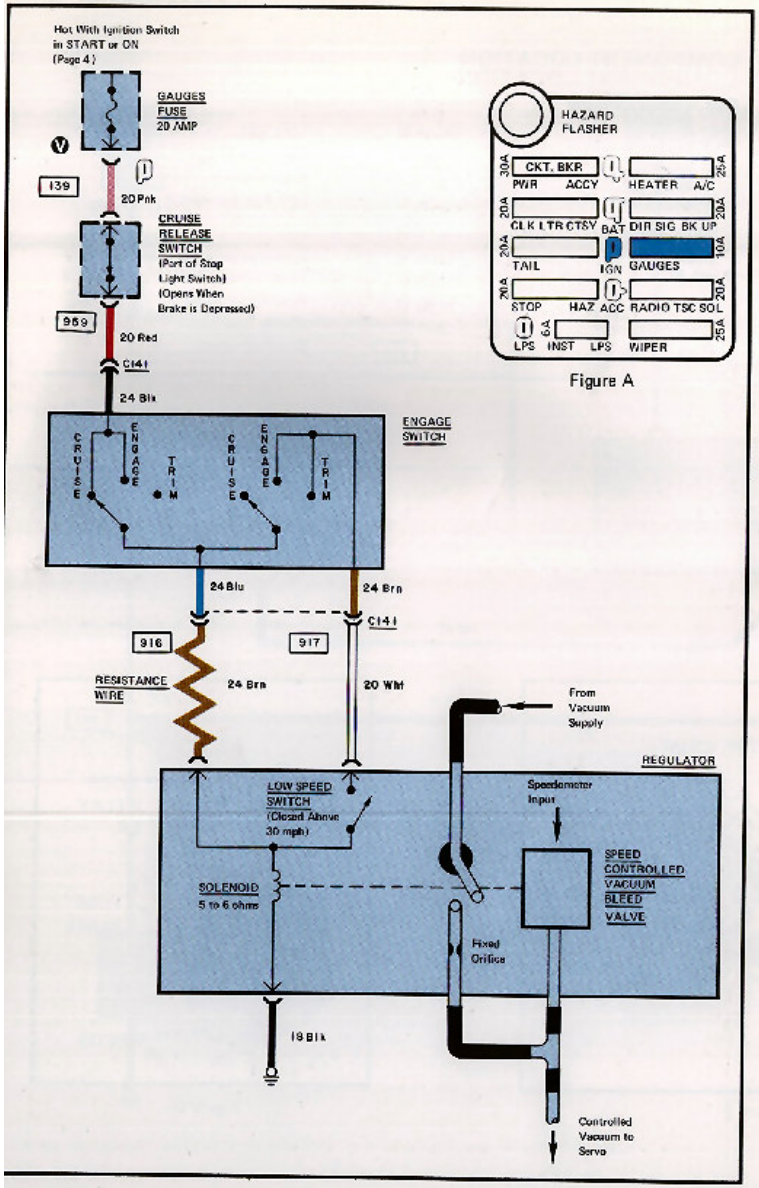

Figure A

CIRCUIT OPERATION

Cruise Control

The Cruise Control is powered by the 20 amp GAUGES Fuse and can be turned on when the IGNITION SWITCH is in the On or Start position. The system is turned on by energizing the solenoid valve in the REGULATOR. Note that the LOW SPEED SWITCH in the REGULATOR locks the entire CRUISE CONTROL system out below 30 mph. Above 30 mph, the system is turned on when the driver pushes the ENGAGE SWITCH to the Engage position (Figure B, position B). The REGULATOR SOLENOID is held closed by the small current that passes through the 40 ohm resistance wire during Cruise (Figure B, position A). The system is turned off by (1) depressing the brake pedal or (2) allowing vehicle speed to fall below 30 mph while the ENGAGE SWITCH is held in Trim position, or 3) pushing ENGAGE SWITCH to Trim position and then releasing switch quickly.

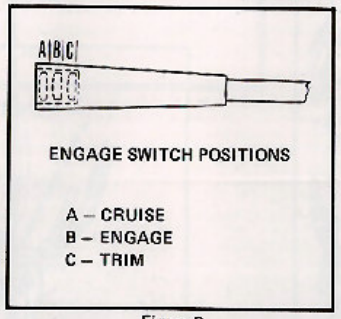

Figure B

Figure D

COMPONENT LOCATION

C141	Figure C	Near stop switch
Cruise Release Switch	Figure C	Top of brake pedal
Engage Switch	Figure B	Steering column
GAUGES Fuse	Figure A	Fuse panel
Regulator		Left fender, near brake cylinder
Resistance Wire	Figure D	Front left fender innerskirt

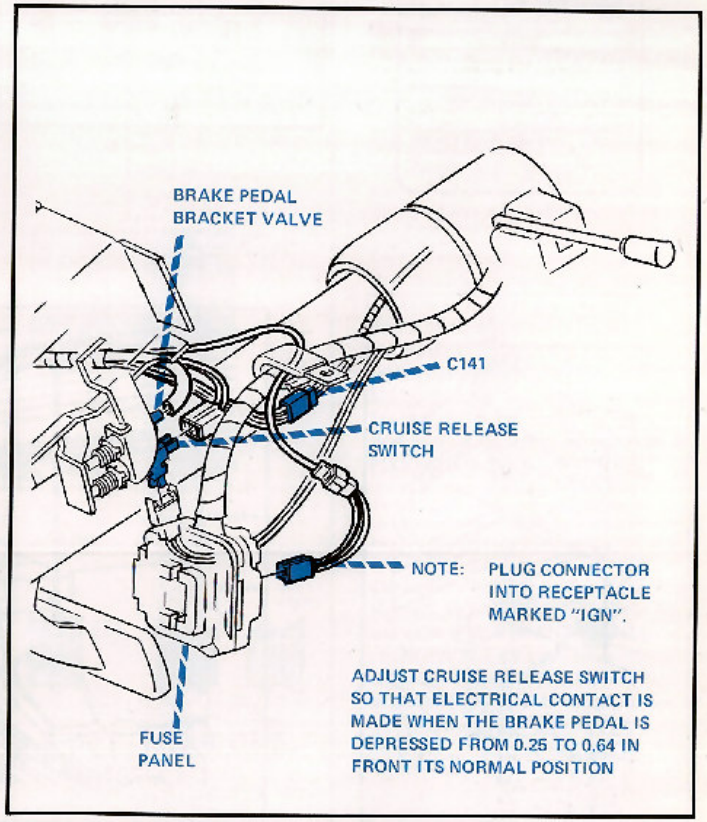

Figure C

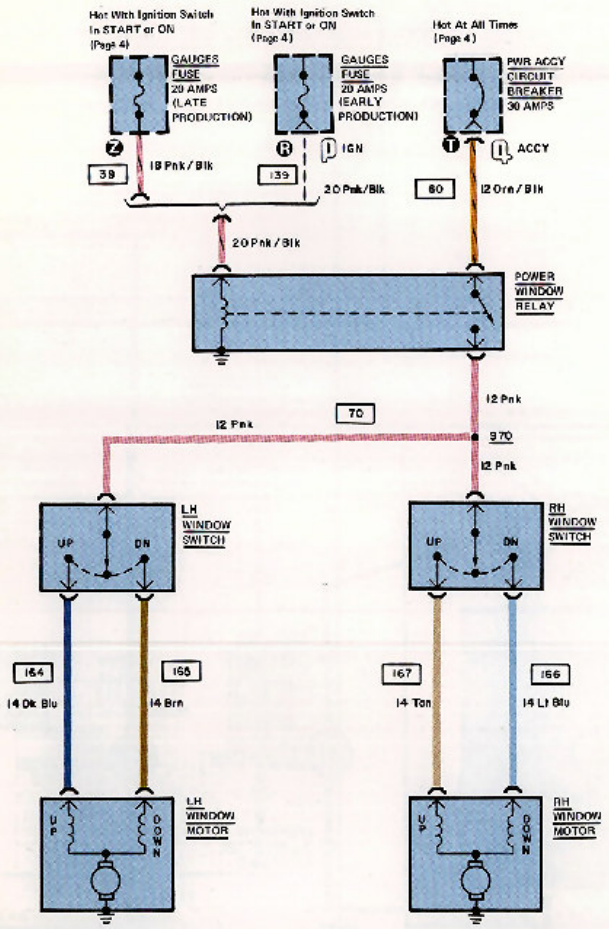

CIRCUIT OPERATION

Power Windows

The power windows are operated by motors having two field windings that control the direction of rotation. To move the window down, one field coil is energized. To move the window up, the other field coil is energized. The WINDOW SWITCH is normally Off. When the SWITCH is momentarily set to the Up or Down position, power is fed to the Up or Down field coil of the motor which moves the window.

The power window motors require a large current for their operation. The current is supplied through the POWER WINDOW RELAY and the 30 amp CIRCUIT BREAKER in the FUSE BLOCK. The relay provides power only when the IGNITION SWITCH is in the Start or On position. Power for the relay coil is supplied through the GAUGES FUSE.

When troubleshooting, if neither window operates, look for faults in circuitry that is common to both window motors - the fuse, the circuit breaker and the relay. If a window operates in one direction only, replace the switch first.

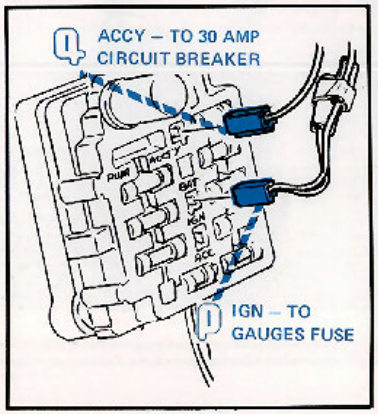

Figure B

COMPONENT LOCATION

PWR ACCY Circuit Breaker	Figure B	Fuse panel
GAUGES Fuse	Figure B	Fuse panel
Power Window Relay	Figure C	Center console
Window Motors	Figure A	Inside doors
Window Switches	Figure C	Center console

CAUTION

Remove electrical connectors from WINDOW MOTOR before working on window regulator.

WARNING

Do not remove the window motor from the regulator without following procedure in section 2D of the 1978 Passenger Car Service Manual. The regulator lift arms are under tension from the counterbalance spring and can cause serious injury if the motor is removed without locking the sector gear in position.

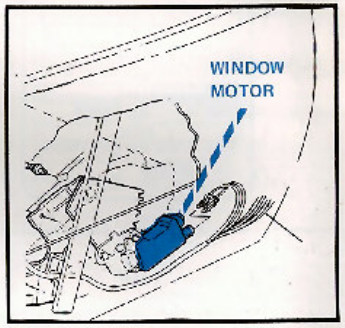

Figure A

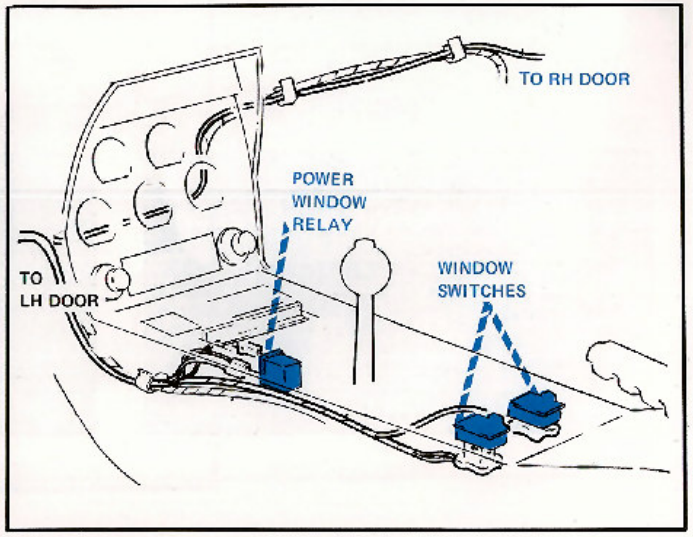

Figure C

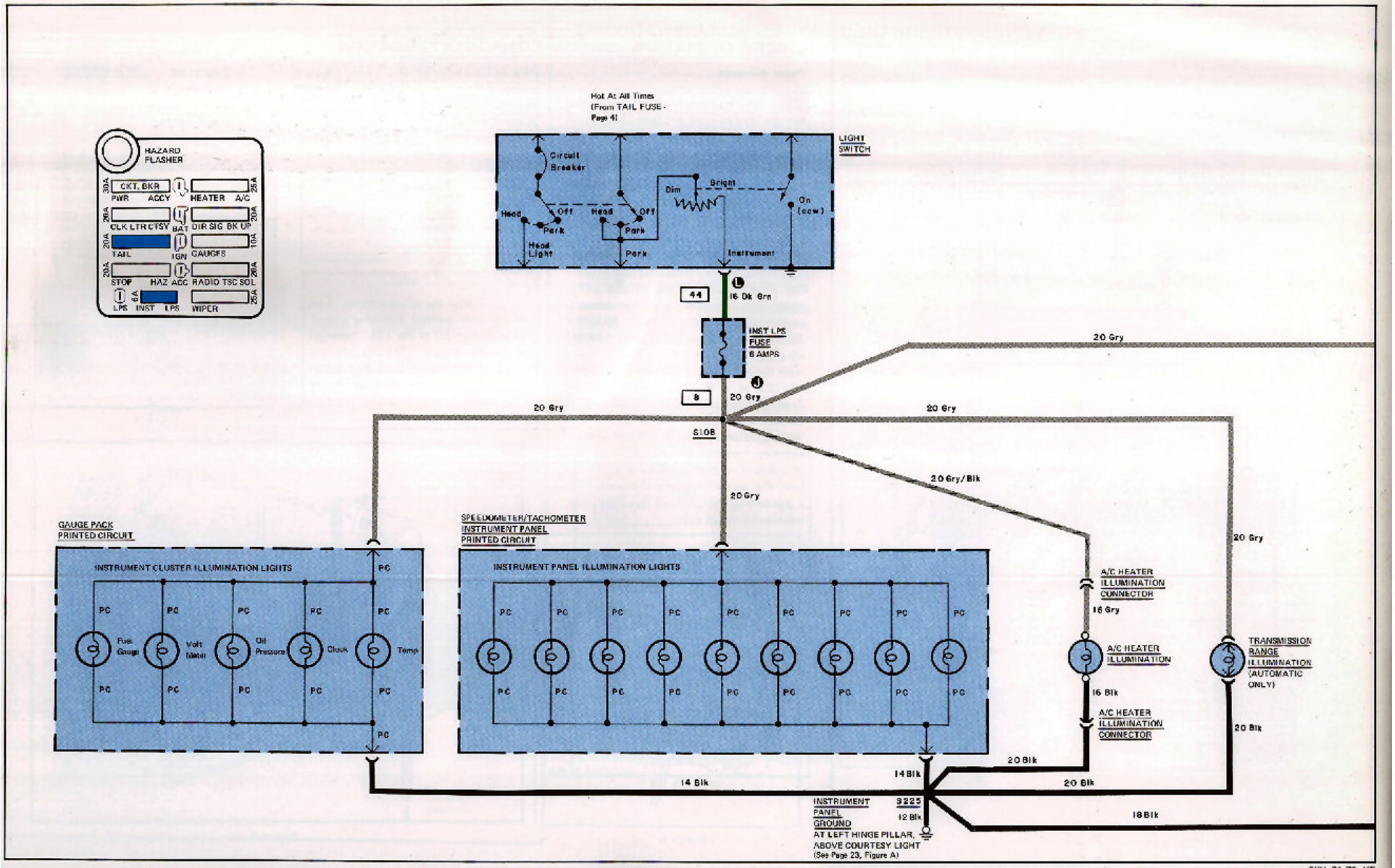
HAZARD FLASHER
30A CKT. BKR 25A
PWR ACCY HEATER A/C
20A 20A
CLK LTR CTSY BAT DIR SIG BK UP
20A 10A
TAIL IGN GAUGES
20A 20A
STOP HAZ ACC RADIO TSC SOL
8A 25A
LPS INST LPS WIPER
Hot At All Times
(From TAIL FUSE - Page 4)
LIGHT SWITCH
Circuit Breaker
Head
Off
Park
Head Light
Dim
Bright
On (ccw)
Instrument
44
16 Dk Grn
INST LPS FUSE 6 AMPS
8
20 Gry
S108
20 Gry/Blk
GAUGE PACK PRINTED CIRCUIT
INSTRUMENT CLUSTER ILLUMINATION LIGHTS
PC
Fuel Gauge
Volt Meter
Oil Pressure
Clock
Temp
SPEEDOMETER/TACHOMETER INSTRUMENT PANEL PRINTED CIRCUIT
INSTRUMENT PANEL ILLUMINATION LIGHTS
A/C HEATER ILLUMINATION CONNECTOR
16 Gry
A/C HEATER ILLUMINATION
16 Blk
TRANSMISSION RANGE ILLUMINATION (AUTOMATIC ONLY)
20 Blk
14 Blk
18 Blk
INSTRUMENT PANEL GROUND
S225
12 Blk
AT LEFT HINGE PILLAR, ABOVE COURTESY LIGHT
(See Page 23, Figure A)

CHV-01-78-VF

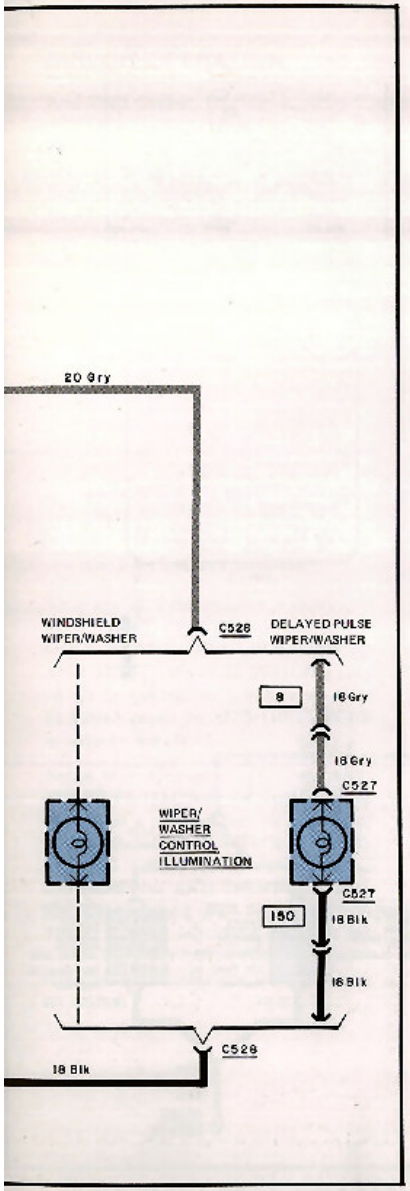

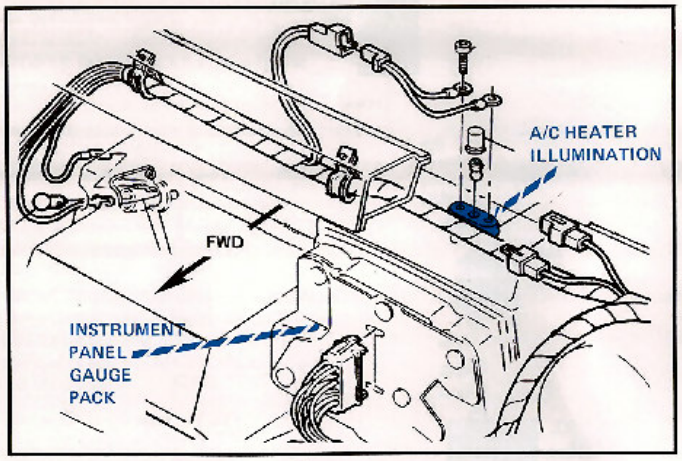

Figure A

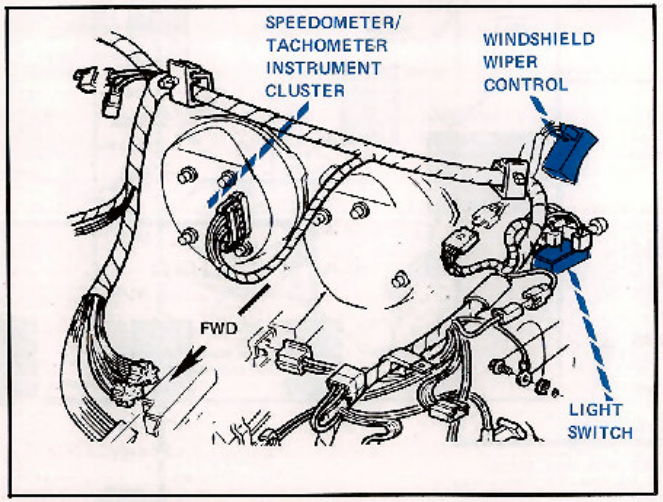

Figure C

COMPONENT LOCATION

A/C Heater Illumination	Figure A	Center console
INST LPS Fuse	Page 28, Figure B	Fuse panel
Gauge Pack	Figure A	
Speedometer/Tachometer Instrument Panel	Figure C	Instrument Panel
TAIL Fuse	Page 28, Figure B	Fuse panel
Transmission Range Light	Figure D	Center console

CIRCUIT OPERATION

Control and Instrument Lights

The GAUGE and INSTRUMENT LIGHTS are powered through the 6 AMP INST LPS fuse. Their brilliance is controlled by the DIMMER RHEOSTAT mounted on the LIGHT SWITCH.

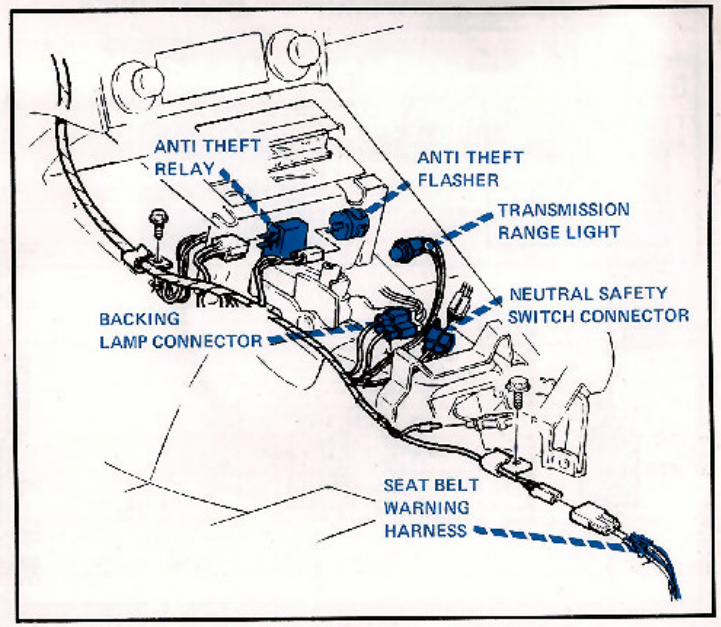

Figure D

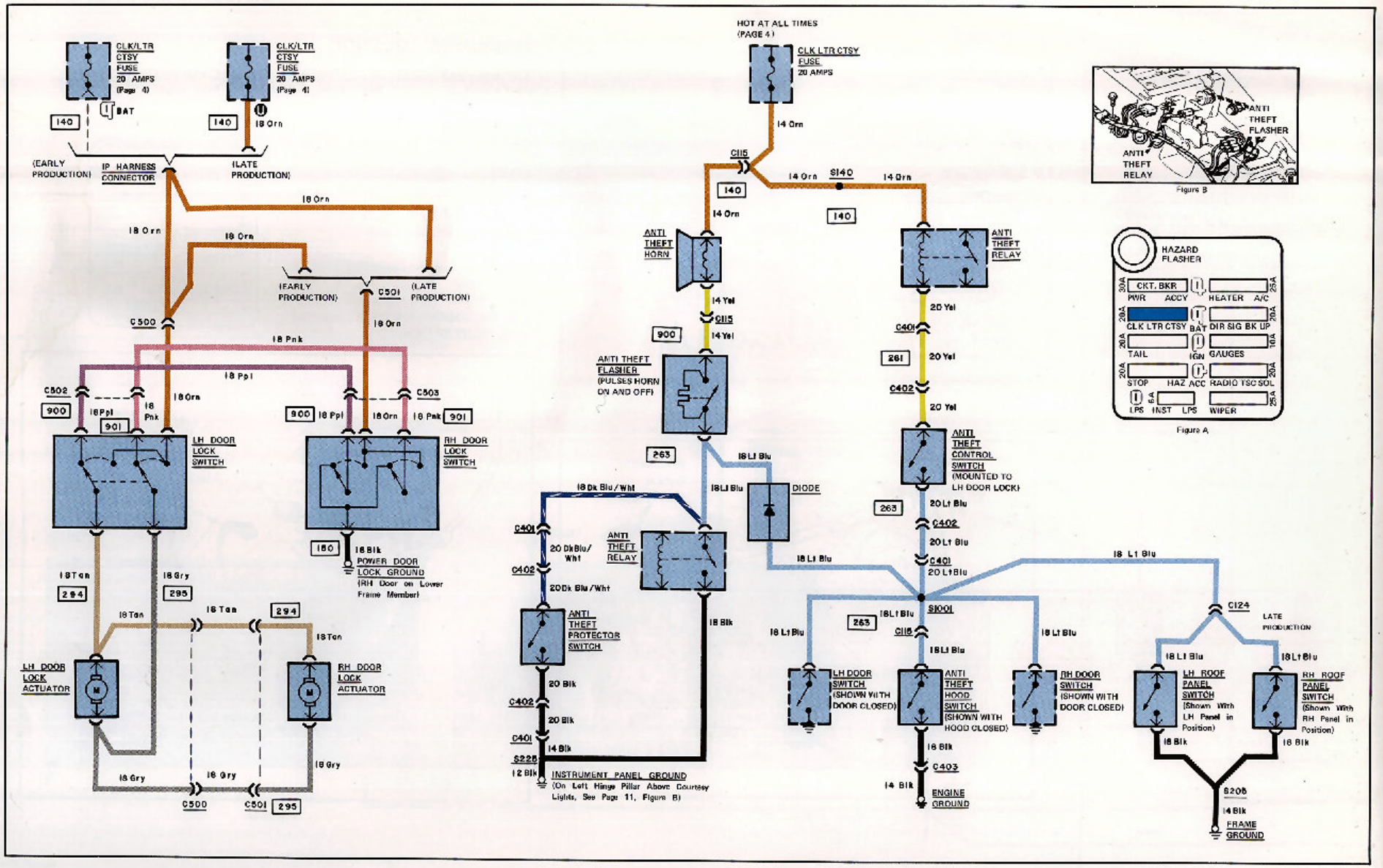
CLK/LTR CTSY FUSE 20 AMPS (Page 4)
BAT
140
(EARLY PRODUCTION)
IP HARNESS CONNECTOR
(LATE PRODUCTION)
18 Orn
C500
C501
18 Pnk
18 Ppl
C502
C503
900
901
LH DOOR LOCK SWITCH
RH DOOR LOCK SWITCH
150
16 Blk
POWER DOOR LOCK GROUND (RH Door on Lower Frame Member)
18 Tan
18 Gry
294
295
LH DOOR LOCK ACTUATOR
RH DOOR LOCK ACTUATOR
HOT AT ALL TIMES (PAGE 4)
CLK LTR CTSY FUSE 20 AMPS
14 Orn
C115
S140
ANTI THEFT HORN
14 Yel
ANTI THEFT FLASHER (PULSES HORN ON AND OFF)
263
18 Lt Blu
DIODE
18 Dk Blu/Wht
ANTI THEFT RELAY
20 Dk Blu/Wht
ANTI THEFT PROTECTOR SWITCH
20 Blk
14 Blk
S225
12 Blk
INSTRUMENT PANEL GROUND (On Left Hinge Pillar Above Courtesy Lights, See Page 11, Figure B)
C401
C402
20 Yel
261
20 Lt Blu
ANTI THEFT CONTROL SWITCH (MOUNTED TO LH DOOR LOCK)
S1001
LH DOOR SWITCH (SHOWN WITH DOOR CLOSED)
ANTI THEFT HOOD SWITCH (SHOWN WITH HOOD CLOSED)
RH DOOR SWITCH (SHOWN WITH DOOR CLOSED)
C403
ENGINE GROUND
C124
LATE PRODUCTION
LH ROOF PANEL SWITCH (Shown With LH Panel in Position)
RH ROOF PANEL SWITCH (Shown With RH Panel in Position)
S205
FRAME GROUND
ANTI THEFT FLASHER
ANTI THEFT RELAY
Figure B
HAZARD FLASHER
CKT. BKR
PWR ACCY
HEATER A/C
CLK LTR CTSY
DIR SIG BK UP
TAIL
GAUGES
STOP HAZ ACC
RADIO TSC SOL
LPS INST LPS
WIPER
Figure A

CHV-01-78-VF

CIRCUIT OPERATION

Anti Theft Circuit

The ANTI THEFT CIRCUIT is powered at all times thorugh the CLK LTR CTSY Fuse. The circuit is armed when the driver closes the ANTI THEFT CONTROL SWITCH (key operated). The ANTI THEFT HORN will sound if any one of 6 switches is momentarily closed. These six switches are:

(1) the LH and RH COURTESY LIGHT SWITCHES - closed by opening either door
(2) the ANTI THEFT HOOD SWITCH - closed by opening the hood
(3) the ANTI THEFT WARNING SWITCH - closed by forcefully removing the ANTI THEFT CONTROL SWITCH.
(4) the LH and RH ROOF PANEL SWITCHES (Late Production).

When any of these switches is closed, the ANTI THEFT RELAY is energized which sounds the ANTI THEFT HORN until the ANTI THEFT CONTROL SWITCH is turned off or the battery is exhausted. The FLASHER causes the ANTI THEFT HORN to pulse on and off.

Notice that in Design No. 2, if the ANTI THEFT PROTECTOR SWITCH is closed (usually as a result of forcible removal of the ANTI THEFT CONTROL SWITCH), the ANTI THEFT HORN will continue to sound after the ANTI THEFT CONTROL SWITCH is turned off. Also, the ANTI THEFT HORN will sound any time the ANTI THEFT PROTECTOR is closed - regardless of whether the alarm has been set or not.

Power Door Locks

The POWER DOOR LOCKS are powered at all times through the CLK LTR CTSY FUSE. The DOOR LOCK ACTUATORS automatically lock or unlock the doors depending on the direction of current flow through the actuators.

To lock the doors, either DOOR LOCK SWITCH is momentarily pressed to Lock. Current flows through the closed switch(es), through the actuators, and back through the closed switches to ground. To unlock the doors, either DOOR LOCK SWITCH is pressed to Unlock and current flows in the opposite direction through the actuators to unlock the doors.

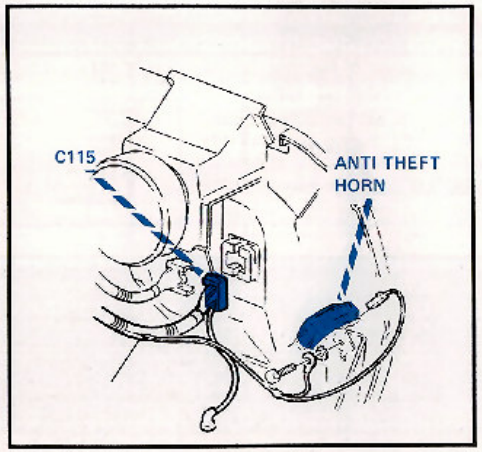

Figure E

COMPONENT LOCATION

Anti Theft Control Switch	Figure D	LH door lock
Anti Theft Flasher	Page 30, Figure B	Center console
Anti Theft Hood Switch	Figure D	Center engine bulkhead
Anti Theft Horn	Figure F	Inside left front fender
Anti Theft Protector Switch	Figure F	LH door lock
Anti Theft Relay	Page 30, Figure B	Center console
C115	Figure E	Behind fuse block
C124		Left instrument panel
C401	Figure F	
C402	Figure F	
CLK LTR CTSY Fuse	Page 30, Figure A	Fuse panel
Diode		Near flasher

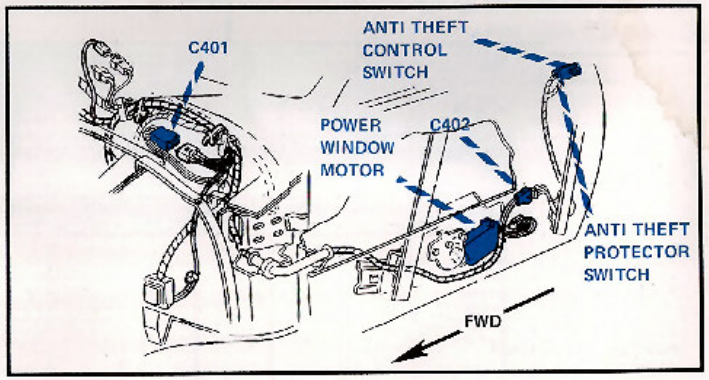

Figure D

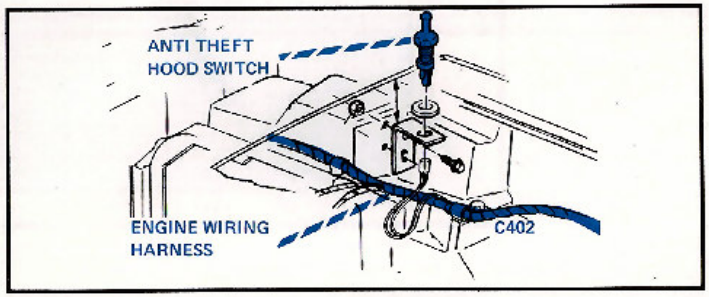

Figure F

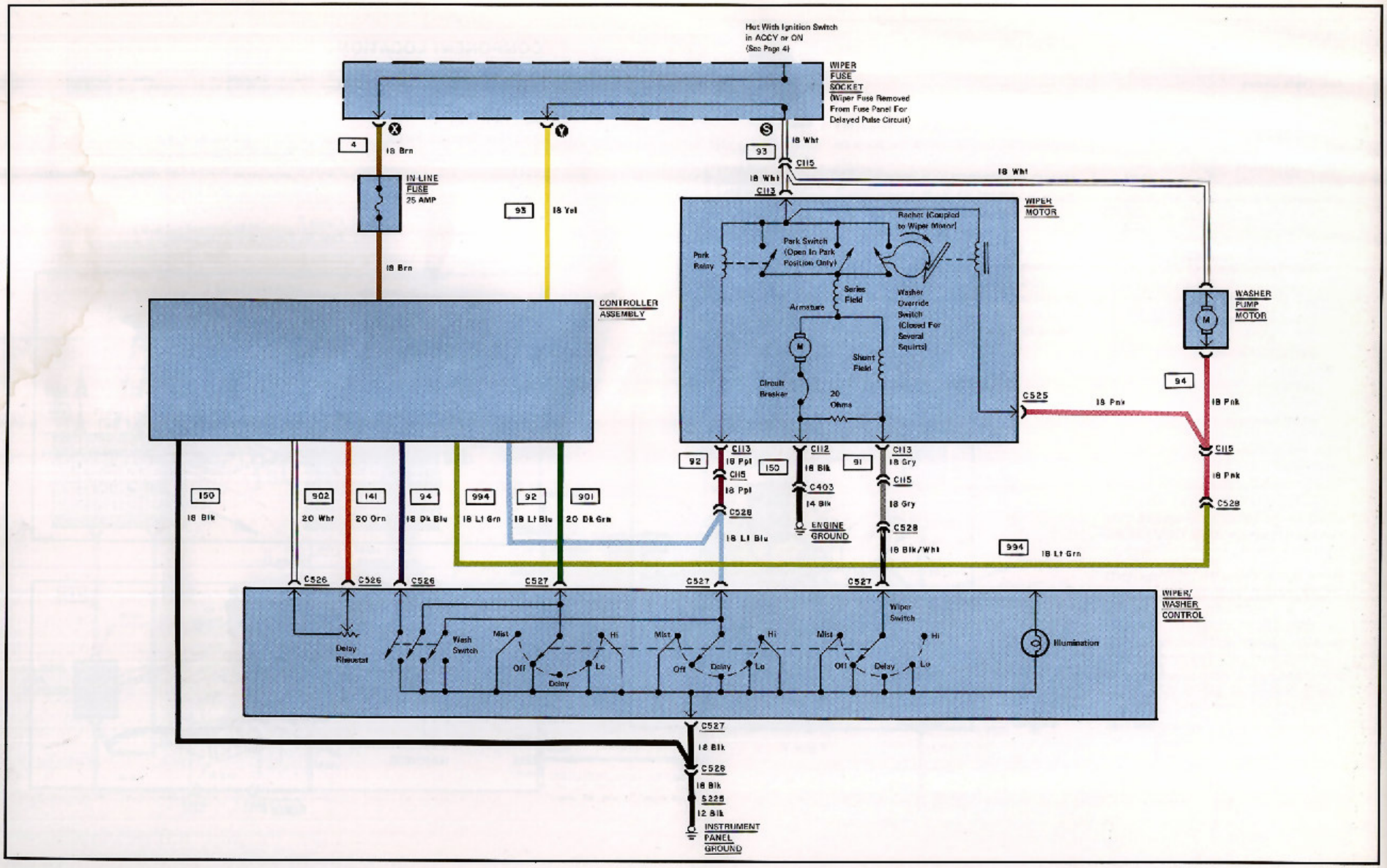
Hot With Ignition Switch in ACCY or ON (See Page 4)
WIPER FUSE SOCKET (Wiper Fuse Removed From Fuse Panel For Delayed Pulse Circuit)
4
18 Brn
IN LINE FUSE 25 AMP
18 Brn
93
18 Yel
93
18 Wht
C115
18 Wht
C113
18 Wht
WIPER MOTOR
Rachet (Coupled to Wiper Motor)
Park Switch (Open In Park Position Only)
Park Relay
Series Field
Armature
Washer Override Switch (Closed For Several Squirts)
Shunt Field
Circuit Breaker
20 Ohms
CONTROLLER ASSEMBLY
WASHER PUMP MOTOR
94
C525
18 Pnk
18 Pnk
C115
18 Pnk
C528
92
C113
18 Ppl
C115
18 Ppl
C528
18 Lt Blu
150
C112
18 Blk
C403
14 Blk
ENGINE GROUND
91
C113
18 Gry
C115
18 Gry
C528
18 Blk/Wht
994
18 Lt Grn
150
18 Blk
902
20 Wht
141
20 Orn
94
18 Dk Blu
994
18 Lt Grn
92
18 Lt Blu
901
20 Dk Grn
C526
C526
C526
C527
C527
C527
WIPER/ WASHER CONTROL
Wiper Switch
Wash Switch
Delay Rheostat
Mist
Off
Lo
Hi
Delay
Illumination
C527
18 Blk
C528
18 Blk
S228
12 Blk
INSTRUMENT PANEL GROUND

CHV-01-78-VF

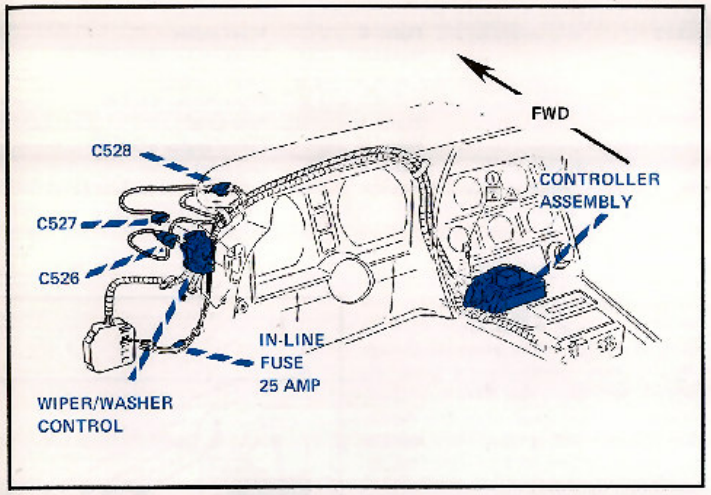

Figure A

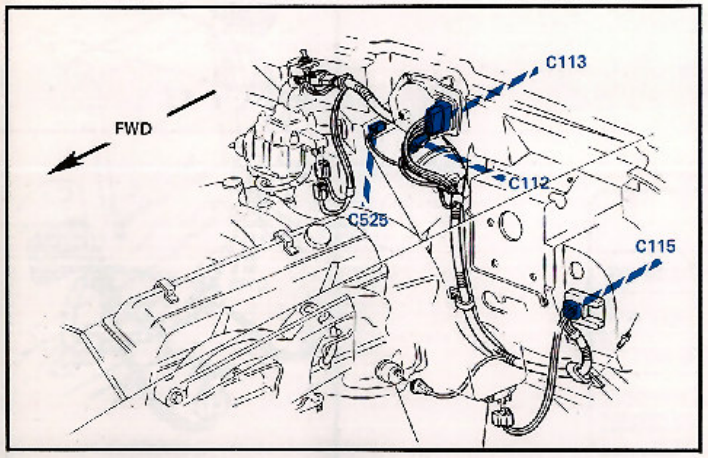

Figure B

CIRCUIT OPERATION

When the IGNITION SWITCH is in the Accy or On position, power is available to the CONTROLLER ASSEMBLY.

When the WASH SWITCH is momentarily closed, the WASHER PUMP MOTOR is grounded, and current flows through the CONTROLLER ASSEMBLY to operate the washer. The washer can be operated with the WIPER SWITCH in any position. If the WIPER SWITCH is in Off position, the CONTROLLER ASSEMBLY turns on power to the WIPER MOTOR for 3 to 5 low-speed sweeps and then turns power off.

The WIPER MOTOR also operates when the WIPER SWITCH is set to Low, High, Delay, or Mist.

With the WIPER SWITCH in any of these positions, the PARK RELAY is energized (92 circuit). The PARK RELAY contacts bypass the PARK SWITCH when the wipers are operating, and current flows through the IN-LINE FUSE, through the CONTROLLER ASSEMBLY, through the WIPER MOTOR, and through the WIPER SWITCH to ground. When the WIPER SWITCH is moved to Off, the PARK RELAY contacts open, and the PARK SWITCH supplies motor power. The wipers operate at Low speed until the wipers are parked.

WIPER MOTOR speed is controlled by the section of the WIPER SWITCH connected to the WIPER MOTOR (91 circuit). The WIPER MOTOR operates at Low speed when its SHUNT FIELD coil is grounded through the 91 circuit. The WIPER MOTOR operates at High speed when its SHUNT FIELD is grounded through the 20 ohm resistor located inside the WIPER MOTOR.

With the WIPER SWITCH set to Delay, the amount of delay between wipes is controlled by rotating the DELAY RHEOSTAT knob. The CONTROLER ASSEMBLY determines the time between sweeps. The longest time is obtained by rotating the knob fully counterclockwise. With the knob rotated fully clockwise, the wipers operate at Low speed without any delay.

By momentarily pressing the WIPER SWITCH to Mist, the WIPER MOTOR operates at Low speed. When the WIPER SWITCH is released, the wiper returns to Park position.

The WIPER MOTOR contains a CIRCUIT BREAKER which removes power temporarily if the motor is stalled.

COMPONENT LOCATION

C112	Page 33, Figure B	Wiper motor
C113	Page 33, Figure B	Wiper motor
C115	Page 33, Figure B	Engine bulkhead, behind fuse panel
C526	Figure A, C	Wiper/washer control
C527	Figure A, C	Wiper/washer control
C528	Figure A, C	Wiper/washer control
Controller Assembly	Figure A, C	Center console
IN-LINE Fuse	Figure A, C	Instrument panel harness, near fuse panel
Wiper Motor	Page 33, Fgiure B	Center engine bulkhead
Washer Pump Motor	Page 33, Fgiure B	Left front fender
Wiper/Washer Control	Page 33, Figure A, C	Left side of instrument panel, above light switch

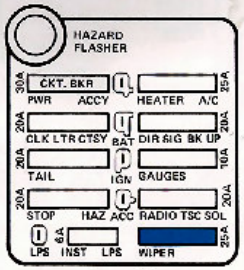

Figure D

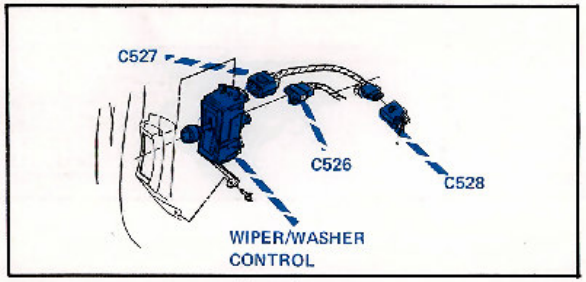

Figure C

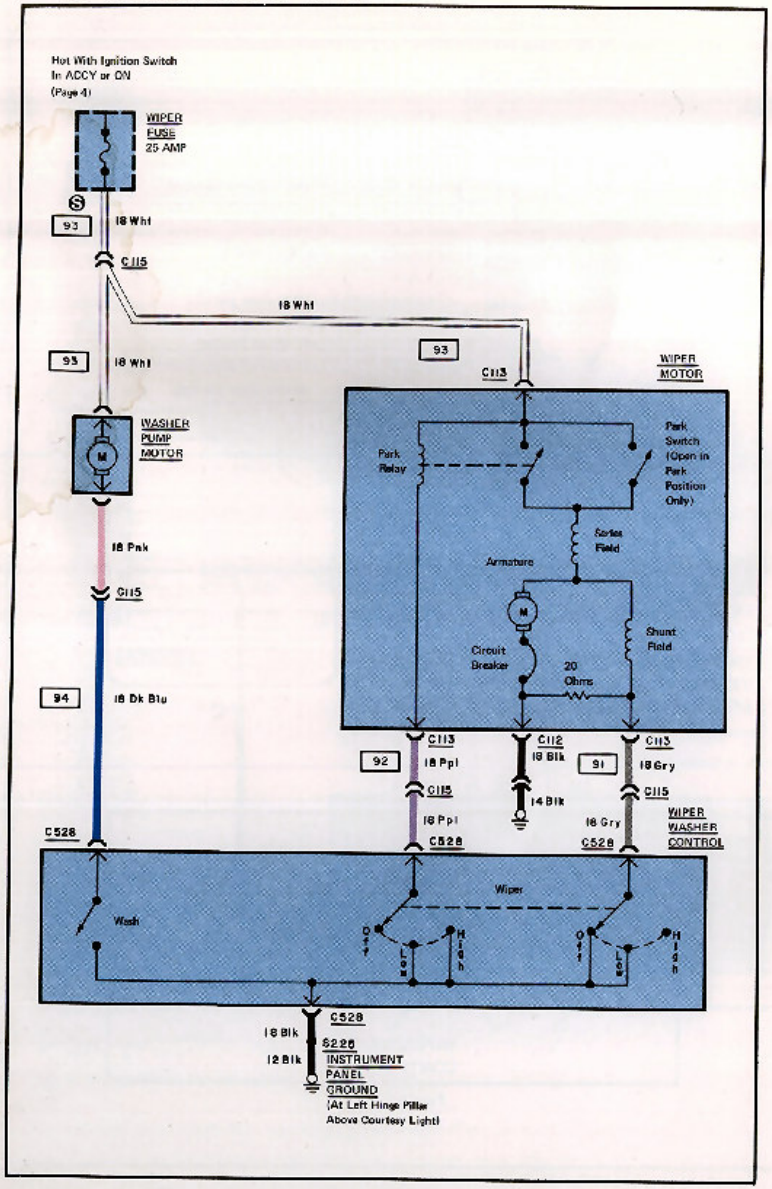

CIRCUIT OPERATION

When the IGNITION SWITCH is in the ACCESSORY or ON position, power is available to the WIPER MOTOR and the WASHER PUMP MOTOR through the WIPER FUSE. The WASHER PUMP MOTOR operates when the momentary WASH SWITCH is closed grounding the WASHER PUMP MOTOR.

The WIPER MOTOR operates when the WIPER SWITCH is set to Low or High. One section of the WIPER SWITCH is connected to the PARK RELAY coil (92 circuit) and energizes the relay during both Low and High speed operation. The PARK RELAY contacts bypass the PARK SWITCH when the wipers are operating. When the WIPER SWITCH is moved to Off, the PARK RELAY contacts open, and the PARK SWITCH supplies motor power until the wipers are parked.

WIPER MOTOR speed is controlled by the section of the WIPER SWITCH connected to the WIPER MOTOR (91 circuit). The WIPER MOTOR operates at a Low speed when its SHUNT FIELD coil is grounded through the 91 circuit. The WIPER MOTOR operates at a High speed when its SHUNT FIELD coil is grounded through the 20 ohm resistor located inside the WIPER MOTOR. The WIPER MOTOR operates in low speed when the WIPER SWITCH is in Off or Low. Low speed is selected in Off to produce a smooth approach to the Park position.

The WIPER MOTOR contains a CIRCUIT BREAKER which removes power temporarily if the motor is stalled.

COMPONENT LOCATION

C112	Figure B	Wiper motor
C113	Figure B	Wiper motor
C115	Figure B	Engine bulkhead
C528		Wiper Washer Control
WIPER Fuse	Figure A	Fuse panel
Wiper Motor	Figure B	Center engine bulkhead
Washer Pump Motor	Figure B	Left front fender
Wiper Washer Control	Page 23, Figure A	Left side of instrument panel, above light switch

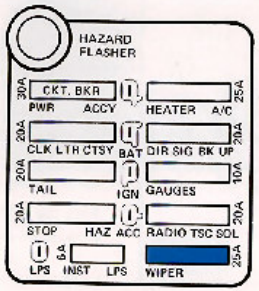

Figure A

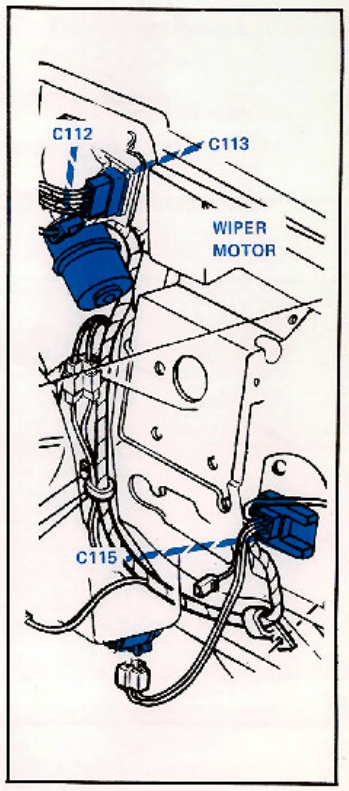

Figure B